Marine Installation Manual

X62DF-M-1.0

Issue **2025-06**

WinGD Ltd.
WinGD AG
WinGD S.A.

Schützenstrasse 3
8400 Winterthur
Switzerland

© 2025 WinGD Ltd. — All rights reserved

No part of this publication may be reproduced or copied in any form or by any means (electronic, mechanical, graphic, photo-copying, recording, taping or other information retrieval systems) without the prior written permission of the copyright holder. WinGD Ltd. makes no representation, warranty (express or implied) in this publication and assumes no responsibility for the correctness, errors or omissions of information contained herein. Information in this publication is subject to change without notice.

NO LIABILITY, WHETHER DIRECT, INDIRECT, SPECIAL, INCIDENTAL OR CONSEQUENTIAL, IS ASSUMED WITH RESPECT TO THE INFORMATION CONTAINED HEREIN. THIS PUBLICATION IS INTENDED FOR INFORMATION PURPOSES ONLY.

List of Changes

The following tables reflect the changes and updates to the contents of this document. Minor changes in layout or language are not taken into consideration.

Revision:	01	Date of issue:	2025-06	
Location of change				**Subject**
1.1 Engine capability and features				Operation in diesel mode updated
1.2.1 Engine rating field				Table 1-3 updated
1.3 Engine tuning				Options updated
2.5 Power range limits				Line 3 Speed limit and Line 4 Overspeed limit updated
2.6 Power range limits with PTO installations for an FPP				Figure 2-5, Figure 2-6 updated
3.1 Engine dimensions and masses				Table 3-1 and Figure 3-1 updated, Table 3-2 and Figure 3-2 added
4.2.2 High-Temperature circuit				Air separator section updated
4.3.6 Cylinder lubricating oil system				Cylinder lubricating oil supply section added
4.3.7 Maintenance and treatment of lubricating oil				Section updated
4.4.3 Methanol specifications				Section updated
4.4.4 Methanol fuel system arrangement				Figure 4-15 updated
4.4.7 Methanol fuel supply system				Flow meter section updated, Heat exchanger section updated
4.4.8 Methanol fuel valve unit				Section updated
4.4.9 Methanol piping system				Annular space requirements section updated
4.4.11 Ventilation systems for methanol application				Section updated
4.4.12 Methanol sequences of operation				Section updated
4.4.13 Inert gas supply system				Section updated
4.4.14 Purging water supply system				Section updated
4.4.15 Methanol fuel leak test				Section updated
4.4.16 Maintenance work				Section added
4.8.2 Ventilation arrangement				Direct engine ventilation system section updated
5 Engine automation				Figure 5-1 updated
7.1.5 SCR for NOx emissions control				SCR section updated, LP SCR updated, iSCR added

Revision:	--	Date of issue:	2023-12	
Location of change				**Subject**
--				First edition

Table of Contents

List of Changes . . . 0-1

0 Preface . . . 0-1
Marine Installation Manual Introduction . . . 0-1
Explanation of symbols in the Marine Installation Manual. . . . 0-2
Marine Installation Drawing Set . . . 0-3
General Technical Data . . . 0-4
Operation and Maintenance Manuals . . . 0-4

1 Engine Summary . . . 1-1
1.1 Engine capability and features . . . 1-1
Special engine features . . . 1-2
1.2 Primary engine data . . . 1-3
1.2.1 Engine rating field: rating points. . . . 1-4
1.3 Engine tuning . . . 1-5
Shaft power meter option . . . 1-5
Exhaust gas waste gate . . . 1-5
Steam production . . . 1-6
1.3.1 Options. . . . 1-6
Integrated Selective Catalytic Reduction . . . 1-6
High-Pressure Selective Catalytic Reduction . . . 1-6
Low-Pressure Selective Catalytic Reduction . . . 1-6
Steam Production Control . . . 1-6
Scrubber . . . 1-7
1.4 Fuel operating modes . . . 1-8
1.4.1 Operation in methanol mode . . . 1-9
1.4.2 Operation in diesel mode . . . 1-10
The Flex system. . . . 1-10
1.4.3 Changeover between operating modes . . . 1-11
Transfers and methanol trips . . . 1-11

2 Engine Power and Speed . . . 2-1
2.1 Introduction to power and speed. . . . 2-1
2.2 Engine rating field . . . 2-2
Rating points . . . 2-2
2.3 Influence of propeller diameter and revolutions . . . 2-3
2.4 Power range . . . 2-4
Propeller curves and operational points . . . 2-4
Sea trial power . . . 2-5
Sea Margin . . . 2-5
Light Running Margin . . . 2-5
Continuous Service Rating . . . 2-5
Engine Margin . . . 2-6
Contracted Maximum Continuous Rating . . . 2-6
2.5 Power range limits . . . 2-7
2.6 Power range limits with PTO installation for an FPP. . . . 2-11
Method 1 of the PTO incorporation. . . . 2-11
Method 2 of the PTO incorporation. . . . 2-13
2.7 Prohibited operation area . . . 2-14
Prohibited operation area for different speed rated engines. . . . 2-16
2.8 CPP requirements for the Propulsion Control System . . . 2-19

3 Engine Installation . . . 3-1
3.1 Engine dimensions and masses . . . 3-1
Dimension and masses with iSCR . . . 3-1
Dimension and masses without iSCR . . . 3-2
3.1.1 Drawings and 3D CAD model availability . . . 3-3
3.1.2 Dismantling dimensions . . . 3-3
3.1.3 Crane requirements . . . 3-4
3.1.4 Thermal expansion between turbocharger and exhaust gas piping . . 3-4
3.1.5 Content of fluids in the engine . . . 3-5
3.2 Engine outline views . . . 3-6
3.3 Platform outline views . . . 3-6
3.3.1 Minimum requirements for escape routes . . . 3-6
3.4 Engine foundation and seating . . . 3-7
3.4.1 Engine load and force transmission . . . 3-7
3.4.2 Engine foundation layouts . . . 3-8
3.4.3 Engine installation and fixation . . . 3-9
3.5 Assembly . . . 3-11
3.5.1 Assembly of subassemblies . . . 3-11
3.5.2 Installation of a complete engine . . . 3-12
3.5.3 Installation of an engine from assembled subassemblies . . . 3-12
3.5.4 Installation of an engine in ship on slipway . . . 3-12
3.6 Engine and shaft alignment . . . 3-13
3.6.1 Instructions and limits . . . 3-13
3.6.2 Tools . . . 3-13
3.7 Engine coupling . . . 3-14
3.7.1 Design . . . 3-14
3.7.2 Machining and fitting of coupling bolts . . . 3-14
3.7.3 Tightening . . . 3-14
3.7.4 Installation drawing . . . 3-14
3.8 Engine stays . . . 3-15
3.9 Propulsion shaft earthing . . . 3-16
3.9.1 Preventive action . . . 3-16
3.9.2 Earthing device . . . 3-17
3.10 Twin-engine propulsion . . . 3-19
3.11 Fire protection . . . 3-20
3.12 Conditions and requirements . . . 3-21
3.12.1 Pressure and temperature ranges . . . 3-21
3.12.2 Operating conditions . . . 3-21
Reference conditions . . . 3-21
Design conditions . . . 3-21
3.12.3 Ancillary systems design parameters . . . 3-22
3.12.4 Electrical power requirement . . . 3-23

4 Ancillary Systems . . . 4-1
4.1 Twin-engine installation . . . 4-2
4.2 Cooling water system . . . 4-4
4.2.1 Low-temperature circuit . . . 4-5
Arrangement 1 . . . 4-6
Arrangement 2 . . . 4-6
Arrangement 3 . . . 4-7
Low-Temperature circuit components . . . 4-7
4.2.2 High-Temperature circuit . . . 4-9
High-Temperature circuit components . . . 4-10
4.2.3 Pre-heating . . . 4-12

Pre-heating from cooling water systems 4-12
Pre-heating by direct water circulation 4-12
4.2.4 Freshwater generator 4-13
4.2.5 Cooling water treatment 4-14
4.2.6 General recommendations for the cooling water system design 4-15
4.3 Lubricating Oil systems 4-16
4.3.1 Lubricating Oil requirements 4-16
4.3.2 Main Lubricating Oil system 4-16
Main Lubricating Oil system components 4-17
System oil 4-19
4.3.3 Flushing the Lubricating Oil system 4-19
4.3.4 Actuation oil for methanol injection 4-19
4.3.5 Lubrication for turbochargers 4-19
4.3.6 Cylinder Lubricating Oil system 4-20
Service tank and storage tank 4-22
Electrical trace heating for ship side cylinder Lubricating Oil piping . . 4-22
4.3.7 Maintenance and treatment of Lubricating Oil 4-24
4.3.8 Drain tank 4-24
4.4 Methanol fuel system 4-29
4.4.1 Safety considerations 4-29
4.4.2 Operating principles 4-29
4.4.3 Methanol specifications 4-30
4.4.4 Methanol fuel system arrangement 4-30
4.4.5 Methanol bunkering station 4-32
Bunkering station 4-32
4.4.6 Methanol storage and service tanks 4-32
Tank types 4-32
4.4.7 Methanol Fuel Supply System 4-33
4.4.8 Methanol Fuel Valve Unit 4-33
4.4.9 Methanol piping system 4-34
4.4.10 Methanol fuel venting 4-35
4.4.11 Ventilation systems for methanol application 4-35
Ventilation of double-wall methanol fuel piping 4-35
4.4.12 Methanol sequences of operation 4-36
Operational function test 4-37
Normal operation 4-37
Methanol stopping 4-37
Methanol purging 4-37
Consumption of purging water mixture 4-37
4.4.13 Inert gas supply system 4-37
4.4.14 Purging water supply system 4-38
4.4.15 Methanol fuel leak test 4-39
Factory leakage test 4-39
Leakage test for commissioning and after maintenance 4-39
Operational function test 4-40
4.4.16 Maintenance work 4-40
4.5 Fuel oil system 4-41
4.5.1 Fuel oil system components 4-41
Feed pump: Low-Pressure fuel oil 4-42
Pressure regulating valve 4-43
Mixing unit 4-43
Booster pump: High-Pressure fuel oil 4-45
End-heater 4-45
Viscometer 4-46
MDO/MGO heat exchanger 4-46

Fuel oil filters: Arrangement ‘A’ 4-47
Fuel oil filter: Arrangement ‘B’ 4-52
4.5.2 Fuel oil system with only MDO/MGO or MGO 4-53
Fuel oil feed pump 4-54
Fuel oil heat exchanger 4-54
Fuel oil filter 4-54
4.5.3 Flushing the fuel oil system 4-54
4.5.4 Fuel oil treatment 4-54
Settling tanks 4-54
Service tanks 4-55
Centrifugal fuel oil separators 4-55
4.5.5 Pressurised fuel oil system 4-56
4.5.6 Fuel oil specification 4-57
4.5.7 Fuel oil viscosity-temperature dependency 4-57
4.6 Air supply system 4-58
4.6.1 Capacities of air compressor and receiver 4-59
4.6.2 System specification 4-59
Starting air compressors 4-59
Starting air receivers 4-59
4.6.3 Control air 4-60
4.6.4 Service and working air 4-60
4.7 Exhaust gas system 4-61
4.8 Engine room ventilation 4-62
4.8.1 Ventilation requirements 4-62
4.8.2 Ventilation arrangement 4-63
Arrangement 1: Engine room ventilation system 4-64
Arrangement 2: Direct engine ventilation system 4-65
4.8.3 Air intake quality 4-66
4.8.4 Outside ambient air temperature 4-68
4.9 Piping 4-69
4.9.1 Pipe connections 4-69
4.9.2 Fluid velocities and flow rates 4-69
4.10 PTO, PTI, PTH and primary generator applications 4-70
4.10.1 Requirements 4-70
4.10.2 Arrangements for PTO, PTI, PTH and primary generator 4-71
4.10.3 Application constraints 4-72
4.10.4 Service conditions 4-74
4.10.5 PTO application 4-76
Further services for evaluation of engine performance and X-EL advisory services 4-76
4.10.6 PTO testing 4-76

5 Engine Automation 5-1
5.1 DENIS 5-1
5.2 DENIS concept 5-2
5.2.1 Interface definition 5-2
5.2.2 Approved Propulsion Control Systems 5-2
5.3 DENIS specification 5-3
5.3.1 DENIS interface specification 5-3
5.3.2 DENIS propulsion control specification 5-3
5.4 Propulsion Control Systems 5-4
5.4.1 Functions of the Propulsion Control System 5-6
Remote Control System 5-6
Safety system 5-6
Telegraph system 5-6

Local manual control 5-6
Engine Control System manual control panel 5-6
Options. 5-6
5.4.2 Recommended manoeuvring characteristics. 5-8
5.5 Alarm and Monitoring System. 5-11
5.5.1 Integrated solution 5-11
5.5.2 Split solution. 5-11
5.6 Alarm sensors and safety functions 5-12
5.6.1 Signal processing. 5-12
5.6.2 Requirements of WinGD and classification societies. 5-12
5.7 WinGD Integrated Digital Expert (WiDE) 5-13
5.7.1 Data collection 5-13
5.7.2 Engine diagnostic module 5-13
5.7.3 WiDE installation process 5-14
5.8 Intelligent Combustion Control 5-15
5.8.1 ICC control functions 5-15
5.8.2 ICC activation modes. 5-15
5.8.3 ICC data 5-16

6 Engine Dynamics 6-1
6.1 External mass forces and moments 6-2
6.1.1 Balancing of mass forces and moments 6-2
6.1.2 Countermeasures for second order vertical mass moments 6-3
Integrated ELectrical BAlancer (iELBA). 6-4
Electrically-driven compensator (external compensator). 6-5
Power Related Unbalance 6-6
6.2 External lateral forces and moments 6-7
6.2.1 Lateral vibration types 6-8
H-type vibration 6-8
X-type vibration 6-8
6.2.2 Reduction of lateral vibration 6-9
Lateral stays. 6-9
Determining the minimum number of required lateral stays 6-11
Electrically-driven compensator(s). 6-14
6.3 Longitudinal vibration (pitching) 6-15
Reduction of longitudinal vibration (5-cylinder engines) 6-15
6.4 Torsional vibration. 6-17
6.4.1 Reduction of torsional vibration 6-18
Low-energy vibrations 6-18
High-energy vibrations. 6-18
6.4.2 PTO/PTI systems effect on torsional vibration 6-19
6.5 Axial vibration 6-20
Reduction of axial vibration. 6-20
6.6 Whirling vibration 6-21
6.7 Hull vibration 6-22
6.8 Countermeasures for dynamic effects 6-23
6.8.1 External mass moments and vibrations. 6-23
6.8.2 Synchro-Phasing System in twin engines 6-24
Concept 6-24
Components and control 6-25
Operating modes and restrictions 6-26
6.9 Order forms for vibration calculation and simulation. 6-27

7 Engine Emissions 7-1
7.1 Exhaust gas emissions 7-1
7.1.1 Regulation and calculation criteria for NO_x emissions 7-1
7.1.2 Regulation and calculation criteria for SO_x emissions 7-3
7.1.3 Regulation and calculation criteria for CO_2 emissions 7-5
7.1.4 PM emissions 7-6
7.1.5 Selective catalytic reduction for NO_x emissions control 7-6
Integrated selective catalytic reduction 7-7
High-Pressure SCR 7-8
Low-Pressure SCR 7-9
7.1.6 Scrubber for SO_x emissions control 7-10
7.2 Engine noise 7-15
7.2.1 Air-borne noise 7-15
7.2.2 Exhaust noise 7-16
7.2.3 Structure-borne noise 7-18

8 Engine Dispatch 8-1
8.1 Transportation of engines as part assemblies 8-1
8.2 Protection of disassembled engines 8-1
8.3 Removal of rust preventing oils after transportation 8-1
8.3.1 Internal parts 8-1
8.3.2 External parts 8-1

9 Appendix 9-1
9.1 Classification societies 9-1
9.2 List of abbreviations 9-2
9.3 SI dimensions for internal combustion engines 9-4
9.4 Approximate conversion factors 9-6

List of Tables

1-1 Engine summary values for Maximum Continuous Rating 1-1
1-2 Principal engine features and technologies 1-2
1-3 Rating points 1-4
1-4 Approximate fuel split (energy-based) for different operating modes over load range 1-8
2-1 Line 5 coefficients 2-9
2-2 Line 6 coefficients 2-10
2-3 Line 10 coefficients 2-12
3-1 Engine dimensions and masses with iSCR 3-1
3-2 Engine dimensions and masses without iSCR 3-2
3-3 Design groups of shipyard drawings and 3D CAD models 3-3
3-4 Advantages and disadvantages of the standard and narrow engine foundation layouts 3-8
3-5 Recommended quantities of fire extinguishing medium 3-20
3-6 Electrical power requirement 3-23
4-1 Common and independent systems in twin-engine installations 4-2
4-2 Recommended specifications for raw water 4-14
4-3 Heating cable specification 4-23
4-4 Minimum inclination angles for full operability of the engine (1) 4-26
4-5 Minimum inclination angles for full operability of the engine (2) 4-27
4-6 Minimum inclination angles for full operability of the engine (3) 4-28
4-7 Methanol specifications at the engine inlet 4-30
4-8 Purging water requirements 4-38
4-9 Specification of automatic self-cleaning filter in feed system 4-49
4-10 Specification of automatic self-cleaning filter in booster system 4-50
4-11 Specification of duplex filter in booster system 4-51
4-12 Control air flow capacities 4-60
4-13 Guidance for air filtration 4-66
4-14 Operational temperature range requirements of the turbocharger 4-68

4-15 PTO/PTI/PTH arrangements 4-72

4-16 Possible options 4-72

4-17 Influence of options on engineering 4-73

5-1 Suppliers of Remote Control Systems 5-4

5-2 Recommended manoeuvring steps and warm-up times for FPP 5-9

5-3 Recommended manoeuvring steps and warm-up times for CPP 5-10

5-4 Additional class requirements for alarm sensors and safety functions . . 5-12

6-1 Countermeasures for external mass moments 6-23

6-2 Countermeasures for lateral and longitudinal vibrations 6-23

6-3 Countermeasures for torsional and axial vibrations of the shafting 6-23

9-1 List of classification societies 9-1

9-2 List of abbreviations 9-2

9-3 SI dimensions 9-4

9-4 Conversion factors 9-6

List of Figures

1-1 Power/speed range 1-3
1-2 Functional principle of an exhaust gas waste gate 1-6
1-3 Comparison of steam production power with SPC active and inactive . . 1-7
1-4 Operating modes of the X-DF-M engine 1-8
1-5 Methanol mode operation 1-9
1-6 The Flex system parts 1-10
1-7 The fuel transfer and methanol trip 1-11
2-1 Rating field 2-2
2-2 Propeller curves and operational points 2-4
2-3 Power range limits 2-7
2-4 Power range diagram of an engine with PTO 2-11
2-5 Power range limits for the PTO operation: Method 1 2-12
2-6 Power range limits for the PTO operation: Method 2 2-13
2-7 The prohibited operation area (CMCR speed = R1–R2) 2-14
2-8 Calculating the prohibited operation area for the CMCR speed 2-16
2-9 The prohibited operation area (CMCR speed = 85% of R1–R2) 2-17
2-10 The prohibited operation area (CMCR speed = R3–R4) 2-18
3-1 Engine dimensions with iSCR 3-1
3-2 Engine dimensions without iSCR 3-2
3-3 Thermal expansion, dim. X, Y, Z 3-4
3-4 Minimum requirements for headroom 3-6
3-5 Force transmission to the engine foundation 3-7
3-6 Comparison of the standard and narrow engine foundation layout 3-8
3-7 Foundation bolting 3-9
3-8 Welded type 3-9
3-9 Proposed designs for water-tight bolting 3-10
3-10 Typical shaft earthing arrangement 3-17
3-11 Typical shaft earthing with condition monitoring facility 3-18

3-12 Example of a shaft-locking device 3-19

4-1 Low-Temperature cooling water system for twin-engine installation 4-3

4-2 Separate High-Temperature cooling water circuit 4-4

4-3 Low-Temperature cooling water circuit: single set-point temperature . . 4-6

4-4 Low-Temperature cooling water circuit: dual set-point temperatures . . . 4-6

4-5 Separate Scavenge Air Cooler and Low-Temperature cooling circuits . . 4-7

4-6 High-Temperature cooling water circuit 4-9

4-7 Pre-heating power requirement per cylinder 4-13

4-8 Lubricating Oil system 4-16

4-9 Dual cylinder Lubricating Oil grade installation, enabling independent fuel type operation of engine with a manual changeover valve 4-21

4-10 Single grade cylinder Lubricating Oil installation 4-22

4-11 Trace heating cable arrangement 4-23

4-12 Dimensioning and filling process of Lubricating Oil drain tank 4-25

4-13 Arrangement of vertical Lubricating Oil drains for 6-cylinder engines . . 4-25

4-14 Inclination angles 4-26

4-15 Methanol storage and FSS 4-31

4-16 Methanol storage and FSS 4-36

4-17 Fuel oil system 4-41

4-18 Mixing unit 4-44

4-19 MDO/MGO heat exchanger 4-46

4-20 Mesh size difference between absolute and nominal 4-47

4-21 Fuel oil filter arrangement ‘A’ 4-48

4-22 Fuel oil filter arrangement ‘B’ 4-52

4-23 Fuel oil system: Arrangement with only MDO/MGO or MGO 4-53

4-24 Fuel oil viscosity-temperature diagram 4-57

4-25 Air supply system 4-58

4-26 Determination of exhaust pipe diameter 4-61

4-27 Ventilation system arrangement 1: Engine room ventilation system 4-64

4-28 Ventilation system arrangement 2: Direct engine ventilation system . . . 4-65

4-29 Air filter size (example for 8-cylinder engine) 4-67
4-30 Arrangements for PTO, PTI, PTH 4-71
4-31 FPP with mandatory frequency converter 4-74
4-32 CPP in combination with an optional frequency converter 4-74
4-33 CPP in constant speed operation without frequency converter 4-75
4-34 CPP with two fixed operation speeds without frequency converter 4-75
5-1 Engine automation architecture 5-1
5-2 Engine management and automation concept 5-1
5-3 Remote Control System 5-5
5-4 Propulsion control 5-7
5-5 Manoeuvring speed/power settings for FPP/CPP installations 5-8
5-6 Full sea load steps in FPP load-up program 5-9
5-7 Full sea load steps in CPP load-up program 5-10
5-8 WiDE data collection and analysis process 5-13
5-9 WiDE installation process 5-14
5-10 Intelligent Combustion Control system 5-16
6-1 External mass forces and moments 6-2
6-2 Major components and details of the iELBA 6-4
6-3 Location of an electrically-driven compensator 6-5
6-4 Forces through the engine 6-7
6-5 Lateral vibration: X-type and H-type 6-8
6-6 Lateral stays shifting the resonance frequency above nominal speed . . 6-9
6-7 General arrangement of hydraulic type stays for one-side installation . . 6-10
6-8 General arrangement of hydraulic type stays for both-side installation . 6-10
6-9 Twin-engine installations with two standard engines 6-12
6-10 Variants of twin-engine installations with a standard and a left engine . . 6-12
6-11 Engine stays arrangement on the exhaust side 6-13
6-12 Engine stays arrangement on the engine fuel side 6-13
6-13 Engine stays arrangement on both engine sides 6-14
6-14 Arrangement of longitudinal stays 6-15

6-15 Vibration dampers (spring type and viscous type) 6-19

6-16 Example of axial vibration damper 6-20

6-17 Resulting vibration from SPS combinations 6-24

6-18 Synchro-Phasing System 6-25

7-1 Speed dependent maximum allowable average of NO_x emissions 7-2

7-2 Sulphur limits introduced by IMO according to MARPOL Annex VI 7-3

7-3 Integrated SCR 7-7

7-4 High-Pressure SCR 7-8

7-5 Low-Pressure SCR with urea injection (temperature controlled) 7-9

7-6 Low-Pressure SCR with urea injection (bypass rate controlled) 7-10

7-7 Major components of the SO_x wet scrubber system 7-11

7-8 Open-loop scrubber system 7-12

7-9 Closed-loop scrubber system 7-13

7-10 Hybrid scrubber system 7-14

7-11 Sound pressure level at 1 m distance from the engine 7-16

7-12 Exhaust noise reference point 7-17

7-13 Sound pressure level at funnel top 7-17

7-14 Structure-borne noise level at engine feet vertical 7-18

0 Preface

WinGD provides a range of manuals and tools to help its customers at all stages of a project. From engine design to installation and maintenance, WinGD provides extensive help and support.

This manual is the initial guide to the installation process for this specific engine, providing an overview of different topics which need to be considered in the project and the engine installation phase. In parallel with this manual the drawing sets and software tools provide detailed values and ranges to help finalise the installation process. Each engine also has its own range of operation and maintenance manuals to support the complete life cycle of the engine, following the design and installation phases.

Marine Installation Manual Introduction

The Marine Installation Manual (MIM) contains all information that is necessary in the engine design and installation phases. The MIM provides an essential overview for project and design personnel. Each chapter contains detailed information for design engineers and naval architects, enabling them to optimise plant components and machinery space, and to carry out installation design work.

The MIM must not be considered as a specification. The build specification is subject to the laws of the country of registration and the rules of the classification society selected by the owners. Guidelines for the installation and operation from the maker's side must also be observed. The same applies to the engine requirements and any third-party maker's requirements, they must be fulfilled. System components are not the responsibility of WinGD.

WinGD has prepared the data and information in this document carefully and to the best of knowledge. However, the data and information herein is subject to revision without notice. WinGD does not assume any liability with regard to unforeseen variations in accuracy thereof or for any consequences arising therefrom.

Reference to compliance

All data related to the engines comply with the regulations of:

- revised MARPOL Annex VI
- NO_x Technical code 2008.

Reference information

Specific values and design recommendations are given in the Marine Installation Drawing Set (MIDS), the engine performance data are provided by the General Technical Data (GTD). This chapter explains both tools.

As a part of the MIDS, a Concept Guidance ("DG 9728 Methanol Fuel Supply System") for methanol-fuelled engines is available on WinGD web page: *Concept Guidance for X-DF-M.*

Explanation of symbols in the Marine Installation Manual

Cross references

Cross references are written in blue. They lead to another section, table or figure in the MIM and can be activated by a mouse click. Cross references comprise the number of the respective figure or table, the number and title of the respective section, followed by the page symbol introducing the page number.

Example: Table 4-5, 🗎 4-27

Notes

Notes provide additional information which is considered important and/or draw the reader's attention to it.

Example:

NOTE	The illustration does not necessarily represent the actual configuration or the stage of development of the engine concerned.

Web links

Web links are written in blue italics. They are used with the following symbols and refer to:

- drawings of the Marine Installation Drawing Set (MIDS) available on WinGD web page.
  Example: *MIDS*
- documents like shipyard installation instructions and system concept guidance provided on WinGD web page.
  Example: *Fuels*
- General Technical Data (GTD) application available on WinGD web page.
  Example: *GTD*

Marine Installation Drawing Set

The Marine Installation Drawing Set (MIDS) is part of the documentation provided for licensees, shipyards and operators. The MIDS must be referred to in parallel with the MIM during the engine installation and operation.

The MIDS documentation includes drawings and guidelines that provide:

- engine-ship interface specifications
- general installation / system proposals.

Engine Design Groups

The MIDS covers Design Groups (DG) **97xx**:

9707	Engine Alignment Record Sheets
9709	Engine Alignment
9710	Engine Seating / Foundation
9710-01	Tool Engine Alignment
9715	Engine Stays
9721	Cooling Water Systems
9722	Lubricating Oil Systems
9723	Fuel Oil System
9724	Leakage Collection / Washing System
9725	Air Supply System
9726	Exhaust System
9728	Methanol Fuel Supply System
9730	Various Installation Items [1)]

Links to complete drawing packages

The latest versions of the drawing packages which are relevant for this MIM are available on WinGD web pages:

- Marine Installation Drawings:
  MIDS: complete package.

1) A key for MIDS *Piping Symbols* is included in the MIDS "DG 9730 Various Installation Items" for reference.

General Technical Data

The General Technical Date (GTD) is an application used to calculate the engine performance data, such as temperatures, flow rates and consumption figures based on the selected engine rating and tuning options. The output generated by the GTD is used to design the marine propulsion plant. The GTD can be used for all engines within WinGD portfolio.

GTD output

In addition to the output of characteristic parameters in the whole rating field of the engine, the GTD also delivers data on capacities of coolers, pumps, starting air bottles and air compressors. It provides additional information on the engine radiation, power requirement for ancillary systems, and output data for estimating ancillary equipment size. The GTD can generate data like available components and options for specification and engine rating. In addition to the standard output for ISO reference and design conditions, further operating conditions for which information is required can be defined.

The GTD is accessible on WinGD Customer Portal or on WinGD web page using the following link: *GTD*.

For this engine the GTD application is under development. The project-specific values can be provided by WinGD upon request.

Operation and Maintenance Manuals

After the successful completion of the engine design and installation phases, additional documents are available to support the complete lifecycle of each engine. This additional documentation is available on WinGD Customer Portal and this includes the following documents:

- Instruction Manual
- Spare Parts Catalogue.

1 Engine Summary

The engine is a camshaftless, low-speed, reversible and rigidly direct-coupled two-stroke engine featuring a common-rail injection system.

Table 1-1 Engine summary values for Maximum Continuous Rating

Bore	620 mm
Stroke	2,658 mm
Number of cylinders	5 to 8
Power (MCR)	2,900 kW/cylinder
Speed (MCR)	103 rpm
Mean effective pressure	21.0 bar
Stroke/bore ratio	4.29

Engine dimensions and masses

The details about sizing, specific dimensions and masses are provided in section 3.1 Engine dimensions and masses, 🗎 3-1.

This chapter introduces the engine. It focuses on all aspects of the engine that can be different from other engines. This chapter also highlights the suitability of the engine.

1.1 Engine capability and features

This engine type is designed to run on different liquid fuels, such as methanol, as well as a wide range of marine fuels, such as Marine Gas Oil (MGO) and Heavy Fuel Oil (HFO) of varying qualities. The operating mode can be changed while the engine is running without any loss of power.

Methanol mode

In methanol mode the main fuel is liquid methanol. The methanol fuel is injected into the engine at high pressure. The normal diesel injectors provide pilot fuel to ignite the methanol fuel. The pilot flame penetrates the methanol plume to ignite it from the inside. The amount of injected pilot fuel is approximately 5% of the total energy consumption of the engine at 100% Contracted Maximum Continuous Rating (CMCR) engine power. Project-specific values are available in the *GTD*. Methanol fuel injection is hydraulically actuated and electronically controlled. The pilot fuel can be Marine Diesel Oil (MDO), MGO as well as HFO with maximum sulphur content of 0.5% m/m.

Diesel mode

The main fuel injectors inject the main fuel (HFO, MDO or MGO) in diesel mode. Project-specific values are available in the *GTD*. The X-DF engine operates in diesel mode with either residual marine fuel (HFO) or with marine distillate fuel (MDO or MGO) which must be in accordance with the ISO 8217:2017 specification. The HFO can have a maximum viscosity of 700 cSt. The MDO comprises either DMB or DFB, while the MGO comprises either DMA, DFA, DMZ or DFZ, according to the category definitions in the ISO 8217:2017 specification.

NOTE	This engine meets the IMO Tier III NOx levels in methanol mode and diesel mode through an exhaust gas after-treatment.

Control system

The WinGD Engine Control System (ECS) manages the key engine functions such as gas admission, exhaust valve drives, engine starting and cylinder lubrication. The ECS also ensures control of the fuel injection.

Compliance with international codes

The engine must comply with the following international codes:

- "International Code for the Construction and Equipment of Ships Carrying Liquefied Gases in Bulk (IGC Code)"
- "International Code of Safety for Ship Using Gases or Other Low-flash-point Fuels (IGF Code)".

For specific projects, additional classification society rules must be considered.

Special engine features

WinGD constantly advances its engine portfolio and develops new technologies (see Table 1-2, 🗎 1-2).

Table 1-2 Principal engine features and technologies

Engine features and technologies	MIM chapter or section
The engine can be operated in different fuel operating modes. Methanol, as well as different types of diesel fuels, can be used as main fuel.	1.4
A common-rail exhaust valve actuation system is applied and a common-rail fuel injection system for diesel mode is applied. This unique technology allows optimised combustion, resulting in optimised consumption.	1.4
In methanol mode, low-load engine operation is possible.	1.4.1
Efficiently cooled piston crown is made possible by jet-shaker cooling.	4.3.2
A high-efficiency cylinder lubrication with optimised cylinder Lubricating Oil (LO) consumption is available and made possible by the Pulse Lubricating System (PLS).	4.3.6
The whole engine can be controlled and operated electronically, that is made possible by the Flex system (see The Flex system, 🗎 1-10).	5
Standard data collection and monitoring system is known as the WinGD Integrated Digital Expert (WiDE).	5.7
An engine integrated second order longitudinal vibration compensator is available. This is known as the Integrated ELectrical BAlancer (iELBA).	6.1.2
If contracted and if there is a twin-engine installation, the Synchro-Phasing System[a)] (SPS) is available.	6.8.2
Tier III compliance in diesel and methanol modes is possible with an exhaust gas aftertreatment (e.g. SCR).	7.1.5

a) It is an available option in addition to the chosen engine configuration, and not included in the standard configuration. It needs to be contracted.

1.2 Primary engine data

The engine rating field for this specific engine is displayed in Figure 1-1, 🗎 1-3 together with the WinGD diesel engines. For the detailed engine data, see Table 1-3, 🗎 1-4.

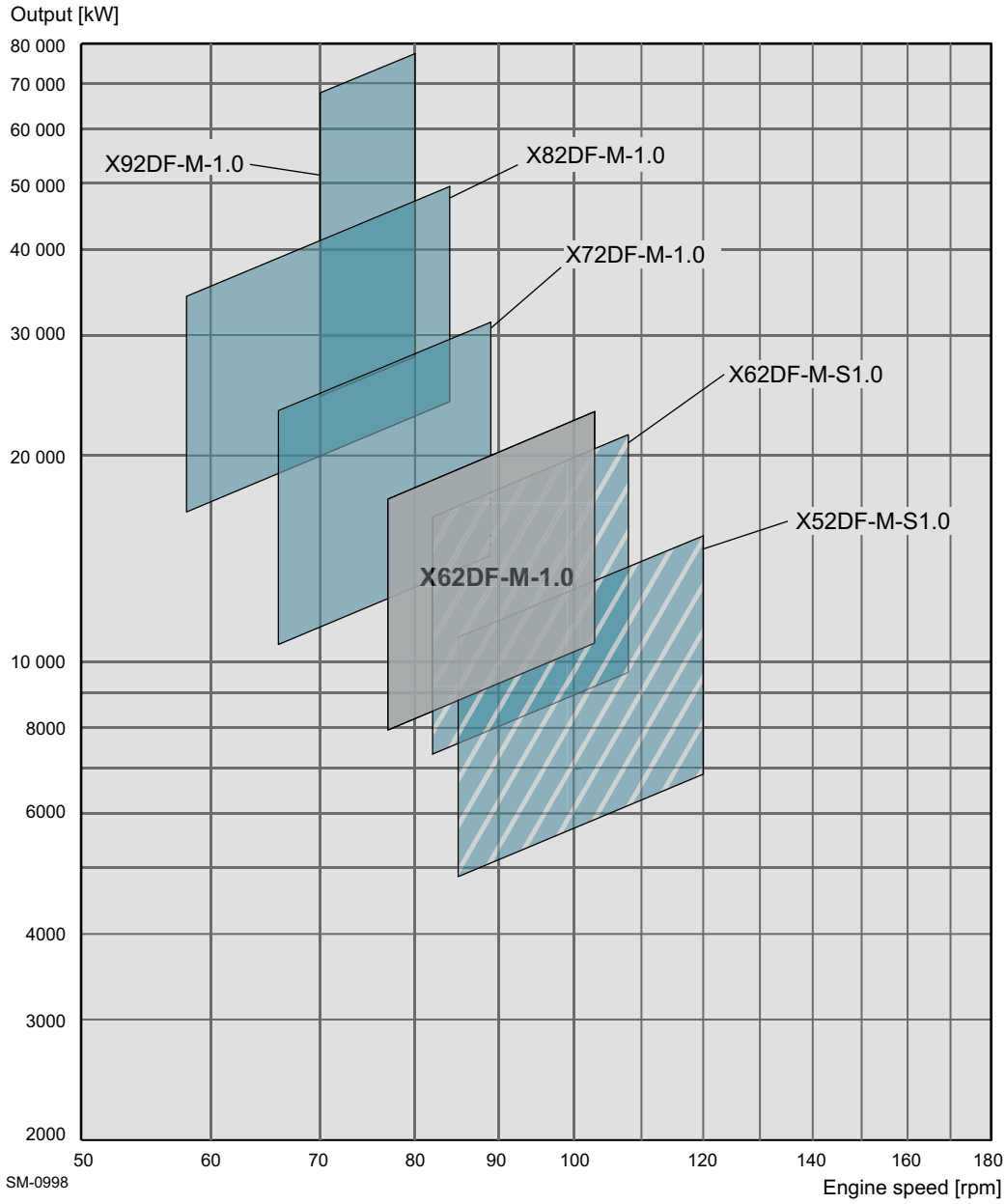

Figure 1-1 Power/speed range

1.2.1 Engine rating field: rating points

The specific values for the four corners of the rating field are called rating points (see Table 1-3, 🗎 1-4). The values provided in the below table are not binding and can be updated without notice. For the prevailing data, please refer to the *GTD*.

Table 1-3 Rating points

Bore x stroke: 620 x 2,658 [mm]				
No. of cylinders	**R1**	**R2**	**R3**	**R4**
	Power [kW]			
5	14,500	10,650	10,800	7,950
6	17,400	12,780	12,960	9,540
7	20,300	14,910	15,120	11,130
8	23,200	17,040	17,280	12,720
Speed [rpm]				
All	103	103	77	77
Mean Effective Pressure (MEP) [bar]				
All	21.0	15.5	21.0	15.4
Lubricating oil consumption (for fully run-in engines under normal operating conditions)				
System oil (diesel mode)	Approximately 6 kg/cylinder per day			
Sealing oil (methanol mode)	Approximately 3 kg/cylinder per day			
Cylinder oil	Guide feed rate of 0.6 g/kWh			

NOTE	Engine performance data can be provided upon request.

1.3 Engine tuning

The Flex system (see section 1.4.2 Operation in diesel mode, 🗎 1-10) enables selection of injection and exhaust valve control parameters, such as Variable Injection Timing (VIT) and Variable Exhaust valve Closing (VEC). This provides the possibility to optimise the Brake Specific Fuel Consumption (BSFC) and the steam production capability at individual engine power ranges. The engine is tuned in diesel mode and methanol mode. Additionally, the requirements of different emissions abatement technologies can be fulfilled.

Compliance with IMO Tier II and III

This engine comply with the International Maritime Organization (IMO) Tier II regulations for NO_x emissions. For Tier III emission compliance, an exhaust gas treatment is required (see section 7.1.5 Selective catalytic reduction for NOx emissions control, 🗎 7-6).

Trade-off between BSFC and NO_x

The parameters controlling the fuel injection and exhaust valve timing are modified with the engine tuning process. This ensures full tuning potential by suitably balancing the design-related limitations, BSFC and NO_x.

There is a trade-off between BSFC and NO_x emissions, where low BSFC results in high NO_x emissions and vice versa. To ensure that IMO regulations are met, any associated increase in NO_x emissions at specific power ranges must be compensated with a reduction in other power ranges.

Shaft power meter option

For WinGD X-DF-M engines, the ECS does not require the installation of a power meter in the shaft line. However, an optional shaft power meter can be installed to monitor the engine performance. If installed, the position of the shaft power meter is usually as close as possible to the main engine's flywheel. In the case of a PTO/PTI/PTH installation on the driving end side, this means that the shaft power meter is usually installed between the PTO/PTI/PTH and the main engine flywheel (see Figure 4-30, 🗎 4-71). Alternatively, the total engine power can be calculated by adding the mechanical power of the PTO/PTI to the measured shaft power.

In the case of a PTO installation on the free end side, the mechanical power of the PTO must be calculated and added to the measured mechanical engine power to determine the total mechanical power output of the engine.

Engine tunings

The engine tuning includes the methanol and diesel operation.

Exhaust gas waste gate

For this engine, it is required an exhaust gas waste gate on the exhaust gas receiver before the turbocharger turbine (see Figure 1-2, 🗎 1-6). The exhaust gas passing through this valve bypasses the turbocharger, flowing to the main exhaust uptake.

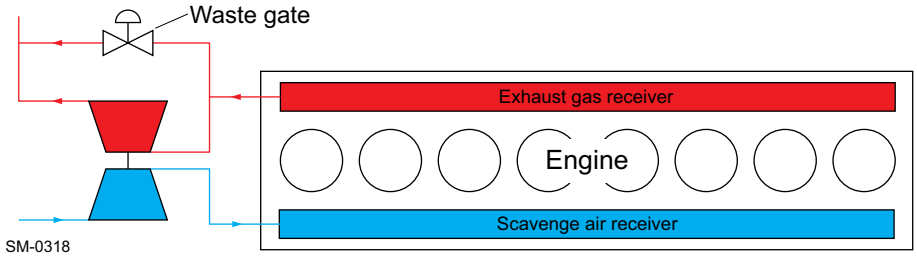

Figure 1-2 Functional principle of an exhaust gas waste gate

Steam production

Increasing the exhaust gas temperature to produce more steam through the economiser is an efficient way of powering on-board steam services and using waste heat from the main engine exhaust gas.

1.3.1 Options

Different options can be selected together with the basic tuning. Depending on the selected basic tuning, only specific options and combinations of options can be available.

Integrated Selective Catalytic Reduction

For installations with the Integrated Selective Catalytic Reduction (iSCR) tuning option, see section 7.1.5 Selective catalytic reduction for NOx emissions control, 🗎 7-6.

High-Pressure Selective Catalytic Reduction

For installations with the High-Pressure Selective Catalytic Reduction (HP SCR) tuning option, see section 7.1.5 Selective catalytic reduction for NOx emissions control, 🗎 7-6.

Low-Pressure Selective Catalytic Reduction

For installations with the Low-Pressure Selective Catalytic Reduction (LP SCR) tuning option, see section 7.1.5 Selective catalytic reduction for NOx emissions control, 🗎 7-6.

Steam Production Control

The Steam Production Control (SPC) is available in methanol mode and diesel mode. It can increase the steam production power. This results in an increase of the BSFC. However, the additional fuel consumption of the main engine is significantly less than the fuel consumption of an alternatively operated oil-fired boiler. The SPC constantly reacts to the steam demand according to the real time steam pressure values up to the maximum possible value.

The SPC system consists of an analogue controlled valve that enables the opening and closing of the exhaust gas waste gate (see section Exhaust gas waste gate, 🗎 1-5), regulating the bypass of the turbocharger from the main engine. By increasing the bypass rate, the mass flow rate of the turbocharger is reduced. This increases the exhaust gas heat, which is used to produce steam as required.

The SPC option is available for this engine, as it is already equipped with an exhaust waste gate (see section Exhaust gas waste gate, 🗎 1-5). Without the SPC, this waste gate valve is either open or closed according to a set engine power percentage. The SPC constantly reacts, restricting the bypass flow to an optimum level. This is achieved by adjusting the valve according to real time steam pressure values, enabling the SPC system to maintain a set steam requirement.

Connection to external systems

The SPC is connected to and receives inputs from external systems, such as the exhaust gas economiser and auxiliary boiler control systems. The additional systems work together with the engine to manage the valve. The system automation and optimisation ensures steam requirement without over production, as defined by the user. This is true regardless of the engine power (see Figure 1-3, 🗎 1-7), where a minimum steam production requirement is set and maintained across the engine power range. With the availability of increased steam, the SPC is more efficient than switching on an auxiliary boiler, with overall fuel and cost savings.

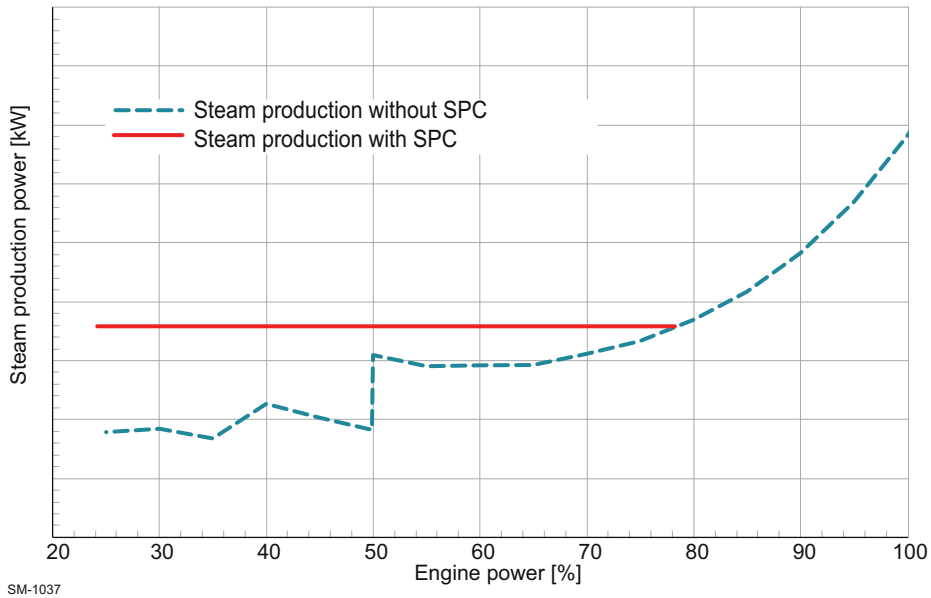

Figure 1-3 Comparison of steam production power with SPC active and inactive

As well as a fully integrated steam production control system, user operated waste gate control is also available. Such an arrangement remains restricted within defined engine limitations, however, it does not ensure optimised efficiency.

GTD

Performance data referring to the use of the SPC in conjunction with WinGD engines is available in the *GTD*.

Scrubber

For scrubber installation, see section 7.1.6 Scrubber for SOx emissions control, 🗎 7-10.

1.4 Fuel operating modes

The engine is designed for continuous service on methanol fuel as well as fuel oil. Depending on the selected option, different operating modes are available within specific engine power ranges (see Figure 1-4, 🗎 1-8). The fuel split ranges are shown in Table 1-4, 🗎 1-8.

The following list includes the operating modes of the X-DF-M-1.0 engine:

- methanol mode
- diesel mode.

Changeover between the operating modes:

- transfer (automatically active for changeover to, or between, modes with methanol operation)
- methanol trip (immediate action, always available while a mode with methanol operation is selected).

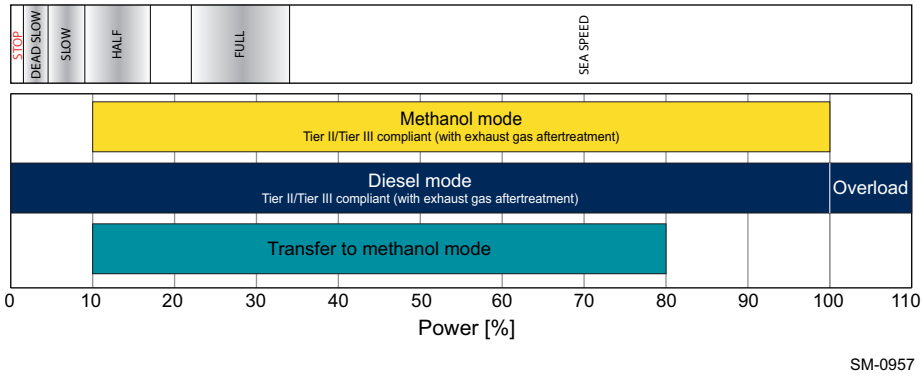

Figure 1-4 Operating modes of the X-DF-M engine

Table 1-4 Approximate fuel split (energy-based) for different operating modes over load range

Methanol mode	5% MGO/MDO/HFO pilot fuel 95% methanol
Diesel mode	100% MGO/MDO/HFO

NOTE	It is strongly recommended that transfer and operation in methanol mode is initiated above the Barred Speed Range. As a result, this can increase the lower limit value above 25%.

1.4.1 Operation in methanol mode

The engine operates in methanol mode according to the diesel cycle. The normal diesel injectors are used to provide pilot fuel to ignite methanol fuel. The pilot flame penetrates methanol plume to ignite it from the inside. The amount of injected pilot fuel is approximately 5% of the total energy consumption of the engine at 100% CMCR engine power (for further information on energy distribution during methanol mode, see Figure 1-5, 🗎 1-9).

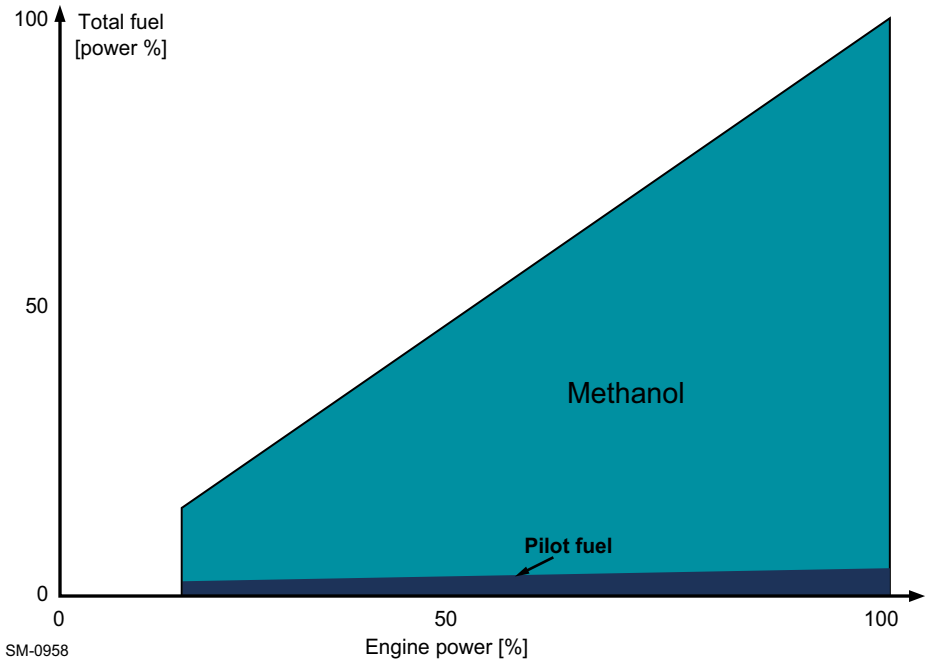

Figure 1-5 Methanol mode operation

NOTE	At any time, methanol operation can be immediately stopped by initiating a methanol trip.

1.4.2 Operation in diesel mode

In general, diesel mode is always available. If the methanol system fails or the engine output in methanol mode is insufficient, the diesel mode provides operational flexibility and a fail-safe.

The main fuel can be changed over from either MDO or MGO to HFO.

For further information on the engine operation on distillate fuels, please refer to the document "Fuels" on WinGD web page: *Fuels*.

The Flex system

The engine is equipped with the WinGD Flex system. It is a common-rail injection system which enables flexible fuel injection.

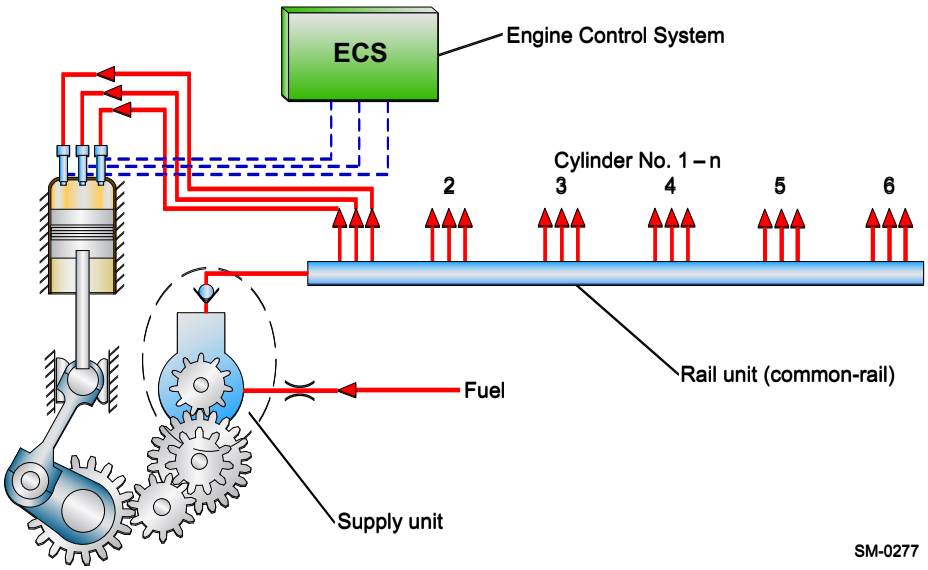

Figure 1-6 The Flex system parts

Major benefits

The major benefits of the Flex system include the following:

- adapted for different operating modes
- adapted for different fuels
- optimised part load operation
- optimised fuel consumption
- precise speed regulation, especially at very low speed operation
- smokeless operation across the entire engine power range
- benefits in terms of operating costs, maintenance requirements and compliance with emissions regulations.

1.4.3 Changeover between operating modes

The changeover between operating modes is the process of the engine changing between different fuel operating modes (see section 1.4 Fuel operating modes, 1-8).

Depending on the type of changeover between operating modes, the required time varies. Changeover of operation mode from methanol to liquid fuel oil is executed immediately. However, the introduction of methanol takes a few minutes.

Diesel mode	An overload of 110% is permitted in emergency conditions (SOLAS Regulations II-1/3.6)
Methanol mode	No overload is available, as the maximum continuous output is 100% of rated power.

All changeovers are restricted by the engine power availability of each operating mode and the transfer power range (see Figure 1-4, 1-8).

Transfers and methanol trips

The changeover between operating modes can be categorised in two ways. If the changeover introduces methanol fuel, it is called a transfer. If the changeover between operating modes stops the use of methanol fuel, thus, defaulting to diesel mode, then the changeover is called a methanol trip (or just a trip). Often a methanol trip is associated with automatic initiation as part of the system safety procedure, but it can also be intentionally initiated by the operator. In comparison to the methanol trip, the transfer between operating modes can only be initiated by the operator.

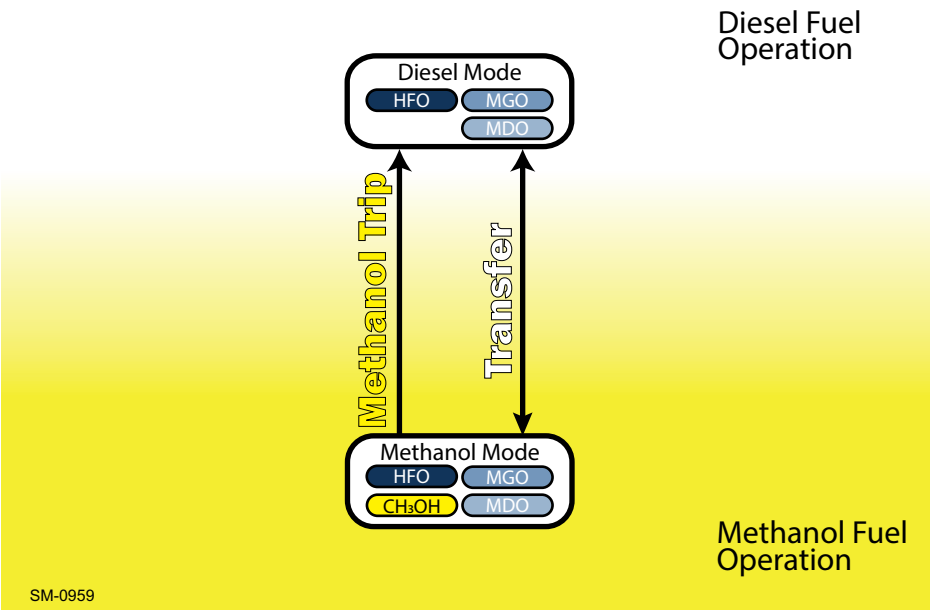

Figure 1-7 The fuel transfer and methanol trip

Methanol trip

A methanol trip always stops the methanol fuel operation and results in diesel mode. The methanol trip is completed within half a revolution of the engine and can occur at any engine power. This includes any point of transfer between operating modes.

While the engine runs in methanol mode, the liquid fuel backup system is always on standby with MGO, MDO or HFO.

The operator can initiate a methanol trip to diesel mode at any time. If the ECS initiates an automatic methanol trip it is a result of either an unacceptable operating condition, a detected failure or a command received from an external system (e.g. the engine safety system). If an automatically initiated methanol trip occurs, then the cause must be investigated. Thus, transferring to methanol mode is prohibited and disabled until the problem is resolved and the alarm is reset.

For further information on failures causing a methanol trip, please refer to the Safety Concept: *2-Stroke Dual-Fuel methanol Safety Concept*.

Transfer introducing methanol fuel

The transfer from diesel mode to methanol mode introduces the methanol fuel. The Fuel Valve Unit (FVU) must complete a system safety test before this gradual changeover can take place.

Methanol mode

The transfer to methanol mode is allowed when the engine operates in diesel mode (Tier II) with MGO, MDO as well as HFO.

Changeover between liquid fuels

Similar to the WinGD diesel engines, changing the fuel input from HFO to either MGO or MDO and vice versa can be done at any time without interruption of engine operation. The fuel oil changeovers are managed by external systems.

2 Engine Power and Speed

Selecting a suitable main engine to meet the power demands of a given project involves proper tuning with respect to load range and influence of operating conditions which are likely to prevail throughout the entire life of the ship. This chapter explains the main principles in selecting a WinGD 2-stroke marine diesel and methanol engine.

2.1 Introduction to power and speed

It is critical that a ship propulsion system correctly matches the main engine characteristics to ensure reliable operation under a variety of conditions including design and off-design conditions. The sections below outline the specifics to aid in this process.

2.2 Engine rating field

The rating field shown in Figure 2-1, 🗎 2-2 is the area of selectable engine design power and engine design speed. In this area, the Contracted Maximum Continuous Rating (CMCR) of an engine can be positioned individually to give the desired combination of propulsive power and rotational speed. Engines within this layout field are tuned for maximum firing pressure and best efficiency at the selected rating.

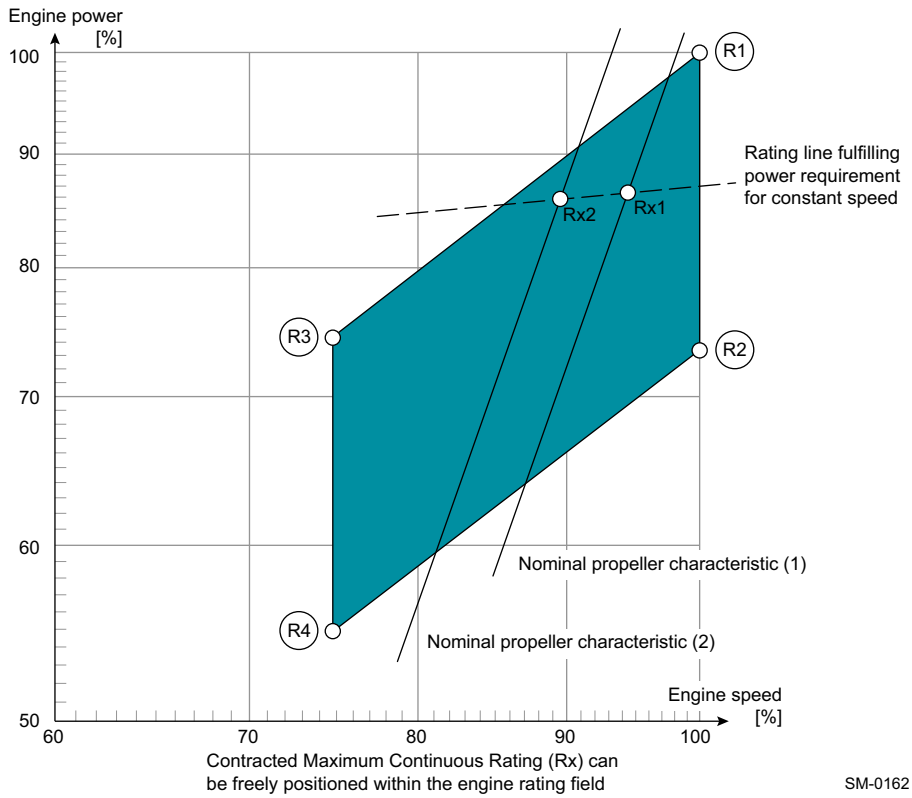

Figure 2-1 Rating field

The rating field serves to determine the specific fuel and fuel methanol consumption, exhaust gas flow and temperature, fuel injection parameters, turbocharger and Scavenge Air Cooler (SAC) specifications at the selected rating.

Percentage values

The engine speed is given on the horizontal axis and the engine power on the vertical axis of the rating field. Both are expressed as a percentage [%] of the respective engine nominal R1 parameters. Percentage values are used in such a way that the same diagram can be applied to various engine arrangements.

Rating points

The rating points (R1, R2, R3, R4) for the WinGD engines are the corner points of the engine rating field (see Figure 2-1, 🗎 2-2). The rating field is limited by two constant Mean Effective Pressure (MEP) lines R1–R3 and R2–R4 and by two constant engine speed lines R1–R2 and R3–R4.

The point R1 represents the nominal Maximum Continuous Rating (MCR). It is the maximum power/speed combination available for a particular engine.

Any rating point (Rx) can be selected within the entire rating field to meet the requirements of each specific project. Such rating points require specific engine adaptations.

2.3 Influence of propeller diameter and revolutions

Influence of propeller revolutions on the power requirement

At constant ship speed and for a given propeller type, a lower propeller speed combined with a larger propeller diameter increases the total propulsive efficiency. Less power is required to propel the vessel at a given speed.

The relative change of required power as a function of the propeller revolutions can be approximated by the following relation:

$$\frac{PX_2}{PX_1} = \left(\frac{n_2}{n_1}\right)^{\alpha}$$

Formula 2-1

where:

PX_j ..... = propulsive power for propeller revolution n_j

n_j ..... = propeller speed corresponding with propulsive power PX_j

α ..... = 0.15 for tankers and general cargo ships up to 10,000 dwt, or
= 0.20 for tankers and bulk carriers from 10,000 to 30,00 dwt, or
= 0.25 for tankers and bulk carriers larger than 30,000 dwt, or
= 0.17 for reefers and container ships up to 3,000 TEU, or
= 0.22 for container ships larger than 3,000 TEU

This relation is used in the engine selection process to compare different engine alternatives and to select an optimum propeller speed within the selected engine rating field. Usually, the number of revolutions depends on the maximum permissible propeller diameter.

Maximum propeller diameter

The maximum propeller diameter is often determined by operational requirements, such as:

- design draught and ballast draught limitations
- class recommendations concerning propeller/hull clearance (pressure impulse induced on the hull by the propeller).

The selection of the main engine in combination with the optimum propeller (efficiency) is an iterative process where also commercial considerations (engine and propeller prices) play an important role.

According to the above approximation, when a required power/speed combination is known (for example, point Rx1 in Figure 2-1, 🗎 2-2), such a CMCR line can be drawn which fulfils the ship power requirement for a constant speed. The slope of this line depends on the ship characteristics (see coefficient α in Formula 2-1, 🗎 2-3). Any other point on this line represents a new power/speed combination, e.g. Rx2, and requires a specific propeller adaptation.

2.4 Power range

Propeller curves and operational points

To establish the proper propeller curves, it is necessary to know the ship speed to power response.

Determining power/propeller speed relationships

Normally, the curves can be determined by using full-scale trial results from similar ships, algorithms developed by maritime research institutes or model tank results. With this information and by applying the propeller series, the power/speed relationships can be established and characteristics developed.

The relation between absorbed power and propeller speed for a Fixed Pitch Propeller (FPP) can be approximated by the following cubic relation:

$$\frac{P}{P_{CMCR}} = \left(\frac{n}{n_{CMCR}}\right)^3$$

Formula 2-2

where:

P ..... = propeller power

n ..... = propeller speed

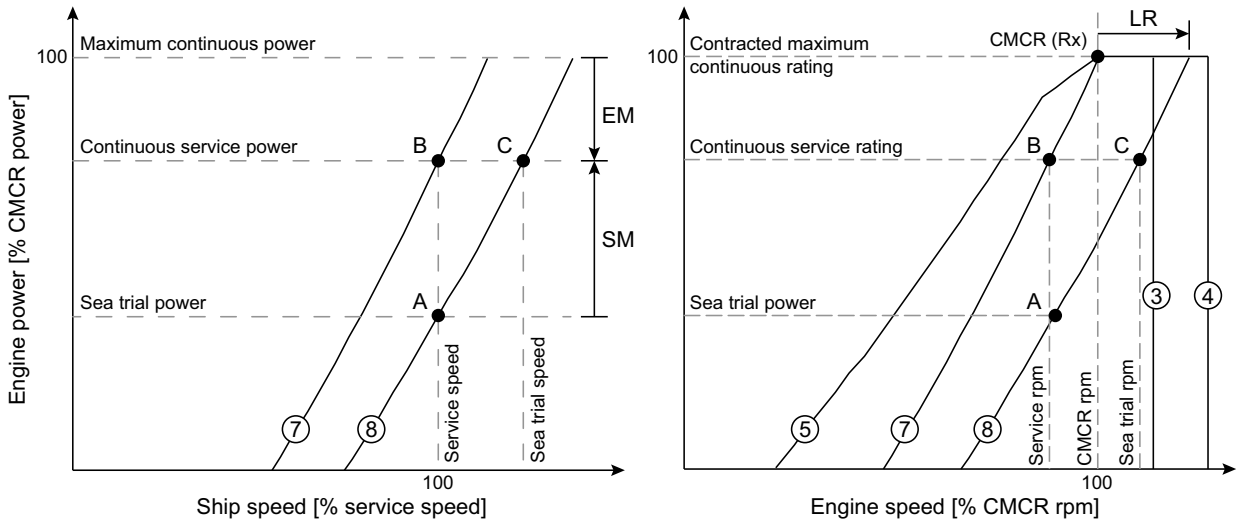

A	Power and ship speed during sea-trials - light running and ideal sea condition
B	Ship design point / Continuous service rating
C	Recommended point for adaptation of propeller pitch under sea-trial condition
EM	Engine margin
LR	Light running margin
SM	Sea margin
Line 3	Maximum engine speed limit for continuous operation
Line 4	Maximum engine overspeed limit during sea-trials
Line 5	Admissible torque limit
Line 7	Nominal engine characteristic curve
Line 8	Propeller curve with a light running margin

SM-0026

Figure 2-2 Propeller curves and operational points

Figure 2-2, 🗎 2-4 outlines the various engine limits, propeller curves and margins required for the engine optimisation. By incorporating the margins listed below, the various operational points and, subsequently, the CMCR point can be determined (see section 2.5 Power range limits, 🗎 2-7 for detailed descriptions of the various line limits).

Sea trial power

The sea trial power must be specified. Figure 2-2, 🗎 2-4 shows the sea trial power to be the power required for reaching service speed (point A) on the propeller curve with a Light Running (LR) margin (Line 8).

Sea Margin

The Sea Margin (SM) is defined as the increase in power to maintain a given ship speed achieved in calm weather (point A in Figure 2-2, 🗎 2-4) under average service condition (point B). This margin can vary depending on expectations of the owner and the charterer, as well as on routes, season and schedules of the ship.

The location of reference point A and the magnitude of the SM are part of the new building contract and are determined between the shipbuilder and the owner. Typically, the SM is specified in the range of 10%–25% of the sea trial power.

Light Running Margin

The Light Running (LR) Margin (see Figure 2-2, 🗎 2-4) is added to compensate for the expected change in speed to relative power, caused by the fouling and the deterioration of the vessel over time. For a given engine power output, the LR propeller (Line 8) operates at a certain percentage of higher propeller speed compared to the nominal engine characteristic (Line 7). The LR margin is agreed upon between the shipyard and the ship owner. The margin depends on the hull and the propeller cleaning interval, as well as the operation route which affects the rate of deterioration (e.g. speed, location, shallow water, etc.)

Typically, the LR margin is specified in the range of 4%–7%. However, additional power/engine speed allowance must be provided for the Power Take-Off (PTO) installations (see section 2.6 Power range limits with PTO installation for an FPP, 🗎 2-11).

Continuous Service Rating

The Continuous Service Rating (CSR) is also known as the Nominal Operation Rating (NOR) or the Nominal Continuous Rating (NCR). Point A represents the power and propeller speed of a ship operating at contractual service speed in calm seas with a new clean hull and propeller. On the other hand, the same ship at the same speed, under service conditions with aged hull and under average weather conditions, requires a power/speed combination according to point B. In that case, point B is the CSR point.

Engine Margin

The Engine Margin (EM) is the relative power (in percentage) which remains at CSR. Most owners specify the contractual ship loaded service speed at 85%–90% power of the CMCR. Different selections are possible. This remaining power, the EM (e.g. 10%–15%), can then be used to catch up with delays in schedule.

This margin is deducted from the CMCR. Thus, the 100% power line is found by dividing the power at point B by the selected percentage (e.g. 85%–90%) of CSR power. The graphic approach to find the level of CMCR is illustrated in Figure 2-2, 🗎 2-4.

Contracted Maximum Continuous Rating

The Contracted Maximum Continuous Rating (CMCR) is also known as the Rx or the Specified Maximum Continuous Rating (SMCR). The CMCR is the point obtained by applying the margins (SM and EM) to the propeller curves. The calculated CMCR point can be selected freely within the entire engine rating field.

2.5 Power range limits

Once an engine is optimised at CMCR (Rx), the working range of the engine is limited by the border lines, as shown in Figure 2-3, 🗎 2-7.

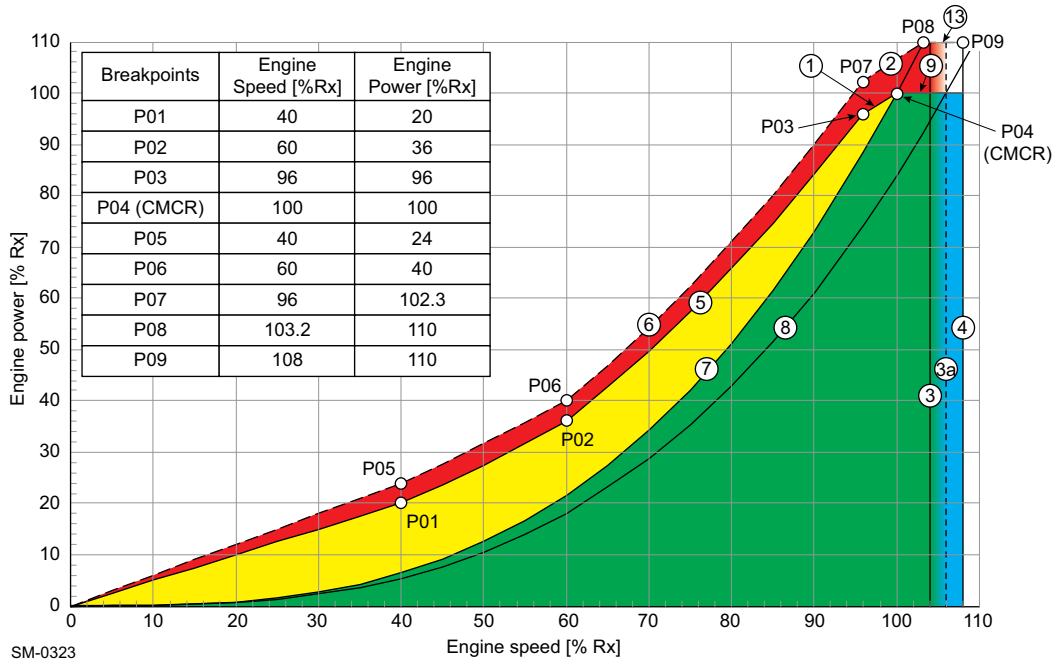

Breakpoints	Engine Speed [%Rx]	Engine Power [%Rx]
P01	40	20
P02	60	36
P03	96	96
P04 (CMCR)	100	100
P05	40	24
P06	60	40
P07	96	102.3
P08	103.2	110
P09	108	110

Figure 2-3 Power range limits

Line 1
100% Torque Limit

Constant MEP or torque line through CMCR from 100% (speed and power) down to 96% (speed and power).

Line 2
Overload Limit

Available in diesel mode for testbed operation and emergency operation according to SOLAS Regulation II-1/3.6. It is a constant MEP line connecting point P07 (102.3% power and 96% speed) to point P08 (110% power and 103.2% speed). Point P08 is the point of intersection between Line 7 and 110% power. Overload is not permitted in methanol mode. If overload is attempted in methanol mode, then the engine safety system automatically initiates a methanol trip to diesel mode at 102% power.

Line 3
Speed Limit

Maximum speed limit for continuous engine running is set to 104% of CMCR speed. However, in diesel mode this limit can be extended to 106% (Line 3a) if Rx speed is reduced ($n_{CMCR} \leq 0.98\, n_{MCR}$), if the specified torsional vibration limits are not exceeded.

Line 4
Overspeed Limit

The overspeed range from Line 3 at 104% (or Line 3a at 106% for selected engines in diesel mode) can extend to an upper speed limit of 108%. If needed for demonstration of 100% CMCR power operation during sea trials, operating in this overspeed range is only permissible in the presence of an authorised engine builder representative. However, the specified torsional vibration limits must not be exceeded.

Line 5
Engine Operation Power Limit

Admissible power limit for engine operation. The line is separated by the breakpoints listed in Figure 2-3, 🗎 2-7.

Line 6 Transient Operation Power Limit

Maximum power limit for transient operation. The line is separated by the breakpoints listed in Figure 2-3, 🗎 2-7.

Line 7 Nominal Engine Characteristic

Nominal engine characteristic curve that passes through the CMCR point is defined by the propeller law:

$$\frac{P}{P_{CMCR}} = \left(\frac{n}{n_{CMCR}}\right)^3$$

Formula 2-3

Line 8 Light Running Propeller Curve

Propeller curve with a LR margin (typically between 4% and 7%). The curve is defined by the propeller law with a constant, governed by the selected LR margin (Formula 2-4, 🗎 2-8).

$$\frac{P_{LR}}{P_{CMCR}} = C \cdot \left(\frac{n}{n_{CMCR}}\right)^3 \qquad C = \left(\frac{1}{1+LR}\right)^3$$

Formula 2-4

where:

P_{LR} ..... = propeller power at selected Light Running margin [kW]

P_{CMCR} ..... = CMCR engine power [kW]

n ..... = selected engine speed [rpm]

n_{CMCR} ..... = CMCR engine speed [rpm]

C ..... = constant

LR ..... = Light Running margin [%]

Line 9 CMCR Power

Line 9 represents maximum power for continuous operation.

100% CMCR Power

Limit for methanol operation.

Line 13 110% CMCR Power

Line 13 represents constant power overload limit, available for testbed operation and emergency operation according to SOLAS Regulation II-1/3.6.

Engine Operation Power Range

Line 5, Line 1 and Line 9 form the curve for the engine operation power range limit, as defined by Formula 2-5, 🗎 2-9. Each component is governed by different coefficients (see Table 2-1, 🗎 2-9).

Table 2-1 Line 5 coefficients

Line no.	Range (n/n_{CMCR})	C2	C1	C0
Line 5	0.00–0.40	0.000	0.500	0.000
	0.40–0.60	0.500	0.300	0.000
	0.60–0.96	1.111	-0.067	0.000
Line 1	0.96–1.00	0.000	1.000	0.000
Line 9	1.00–1.08	0.000	0.000	1.000

$$\frac{P}{P_{CMCR}} = C2\left(\frac{n}{n_{CMCR}}\right)^2 + C1\left(\frac{n}{n_{CMCR}}\right) + C0$$

Formula 2-5

where:

P ..... = selected engine power [kW]

P_{CMCR} ..... = CMCR engine power [kW]

n ..... = selected engine speed [rpm]

n_{CMCR} ..... = CMCR engine speed [rpm]

$C2/C1/C0$ ..= coefficients / constants

The area formed by Line 1, Line 3, Line 5 and Line 9 is the range within which the engine should be operated.

The area limited by Line 7, Line 9 and Line 3 is recommended for continuous operation.

The area between Line 7 and Line 5 is reserved for acceleration, shallow water and normal operational flexibility. If a PTO is installed, then the operating characteristics of the engine differ (for further details on PTO characteristics, see section 2.6 Power range limits with PTO installation for an FPP, 🗎 2-11).

Overload Power Range

Line 6, Line 2 and Line 13 form the curve for the engine overload power limit, as defined by Formula 2-5, 🗎 2-9. Each component is governed by different coefficients (see Table 2-2, 🗎 2-10).

Table 2-2 Line 6 coefficients

Line no.	Range (n/n_{CMCR})	C2	C1	C0
Line 6	0.00–0.40	0.000	0.600	0.000
	0.40–0.60	0.330	0.468	0.000
	0.60–0.96	1.110	0.000	0.000
Line 2	0.96–1.032	0.000	1.066	0.000
Line 13	1.032–1.08	0.000	0.000	1.100

The area above Line 1 and Line 9 is the overload range. It is only permissible to operate engines in this range for a maximum duration of one hour during sea trials and in the presence of an authorised engine builder representative.

The area between Line 1, Line 5 and Line 6 (Figure 2-3, 🗎 2-7), called 'service range with operational time limit', is only applicable to transient conditions in diesel mode (i.e. passing through a Barred Speed Range (BSR), sea trial or emergency fast acceleration). The engine can only be operated in this area for limited periods of time, in particular 1 hour per 24 hours.

2.6 Power range limits with PTO installation for an FPP

A main engine-driven generator is named a Power Take-Off (PTO), as its driving power is provided by the main engine. The addition of the PTO installation alters the working range and operating characteristics of the engine. Two methods of incorporating the PTO are outlined in the following sections. WinGD recommends to follow Method 1.

PTO considerations

- PTO is used for generating the navigation electric power.
- PTO is connected with a frequency converter system.
- PTO is not engaged in heavy sea conditions.
- Mechanical power absorption of the PTO must be considered.

Method 1 of the PTO incorporation

CMCR: Method 1

This first method considers the PTO as an addition to the previously defined propeller power requirements, thus, increasing the CMCR of the engine.

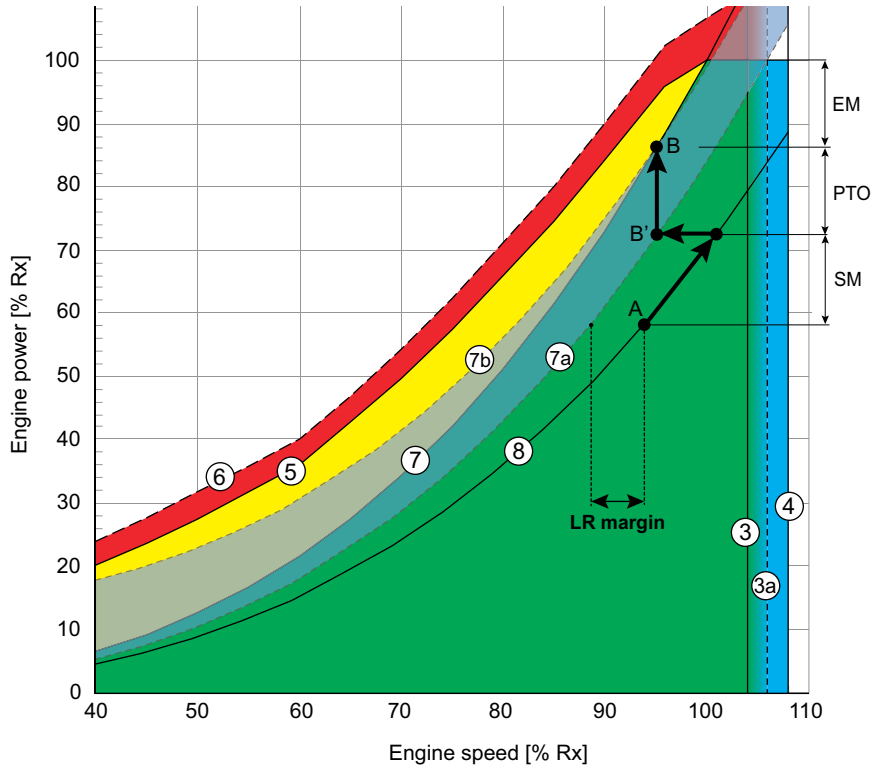

(Line 7) = Nominal engine characteristic
(Line 7a) = Nominal propeller characteristic without PTO
(Line 7b) = Nominal propeller characteristic with PTO
Point A = Light running in ideal sea conditions (sea trial)
Point B = CSR
Point B' = Continuous service without PTO power

SM-0029

Figure 2-4 Power range diagram of an engine with PTO

Line 7a in Figure 2-4, 🗎 2-11 shows the power required for the propeller, where Line 7b shows the power needed for the propeller combined with a constant power requirement from the PTO.

With the addition of a constant nominal generator power across the engine power range, the engine curve is changed, thus, no longer directly related to a propeller characteristic. As shown in Figure 2-4, 🗎 2-11, the PTO is assumed to absorb 15% of nominal engine power. The CSR point includes the PTO power demand, this is shown in the same figure between points B' and B. The CMCR point is selected from this propeller curve. This curve defines the nominal engine characteristic.

Method 1 allows for practical and flexible PTO operation, as limitations only occur in the engine lower speed range. At this lower speed range, the PTO is limited by a minimum speed requirement (as defined by the PTO device supplier) and by the PTO layout limit Line 10 (only relevant if the PTO operation is using a significant percentage of engine power).

Line 10
PTO Layout Limit

The PTO layout limit (Line 10 in Figure 2-5, 🗎 2-12) defines the power limit for the resulting combination of the propeller and PTO. Defining Line 10 as the PTO layout limit provides a margin for normal power load fluctuation and acceleration.

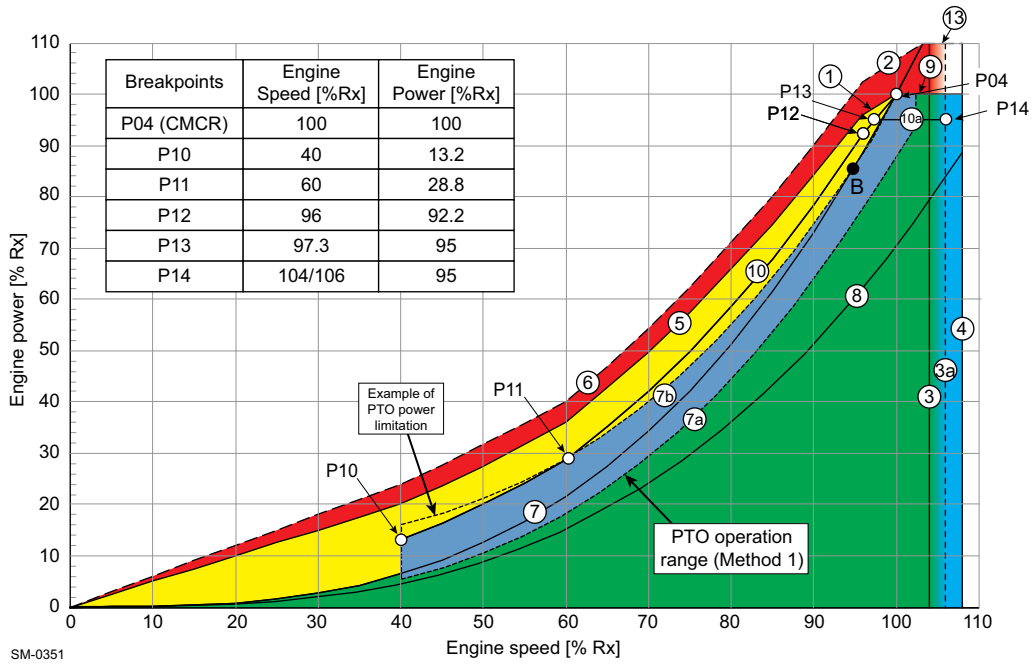

Breakpoints	Engine Speed [%Rx]	Engine Power [%Rx]
P04 (CMCR)	100	100
P10	40	13.2
P11	60	28.8
P12	96	92.2
P13	97.3	95
P14	104/106	95

Figure 2-5 Power range limits for the PTO operation: Method 1

The breakpoints of Line 10 are listed in Figure 2-5, 🗎 2-12. Line 10 is a curve defined by Formula 2-5, 🗎 2-9. The different components have a different coefficient, forming the entire curve (see Table 2-3, 🗎 2-12 for the individual coefficients).

Table 2-3 Line 10 coefficients

Line no.	Range (n/n_{CMCR})	C2	C1	C0
Line 10	0.40–0.60	0.750	0.030	0.000
	0.60–0.96	1.336	-0.321	0.000
	0.96–1.00	0.000	1.941	-0.941

Method 2 of the PTO incorporation

CMCR: Method 2

With this second method, the engine CMCR is determined by the propeller power only. The PTO uses the available engine power which is not absorbed by the propeller.

As shown in Figure 2-6, 🗎 2-13, the available power for the PTO application is between Line 8 and Line 10. Thus, the available PTO power depends on the available LR margin at the current time.

When considering this method, a LR margin of approximately 8% is recommended.

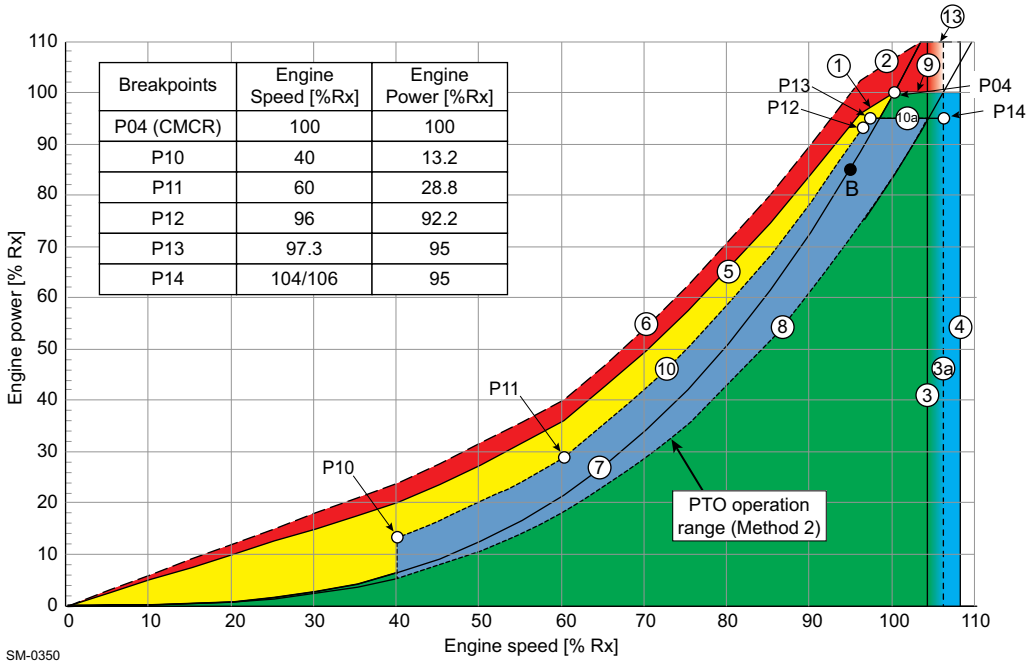

Breakpoints	Engine Speed [%Rx]	Engine Power [%Rx]
P04 (CMCR)	100	100
P10	40	13.2
P11	60	28.8
P12	96	92.2
P13	97.3	95
P14	104/106	95

Figure 2-6 Power range limits for the PTO operation: Method 2

The PTO power must be controlled by the ship power management system, which ensures that the engine operating point does not exceed Line 10.

Further information

The following disadvantages must be observed for Method 2:

- With the reduction of the LR margin (as a consequence of the ageing hull and propeller) the available PTO power is reduced and must be limited by the ship power management system.
- The PTO is typically engaged in approximately 40%–96.5% of engine speed. The final lower limit must be defined with the supplier of the generator. The final upper limit must be set to the project-related CSR engine speed.

If the requested PTO power is higher than the limits defined by Method 2, an increase in CMCR power is necessary.

2.7 Prohibited operation area

Within the higher speed range of the engine there is a prohibited operation area defined by a minimum engine power requirement. During normal operation, including Controllable Pitch Propeller (CPP) at zero pitch operation, the engine does not enter this prohibited area. However, if the propeller is disconnected from the engine, the engine is capable of entering the prohibited operation area, which is strictly forbidden (see section 4.10.6 PTO testing, 🗎 4-76).

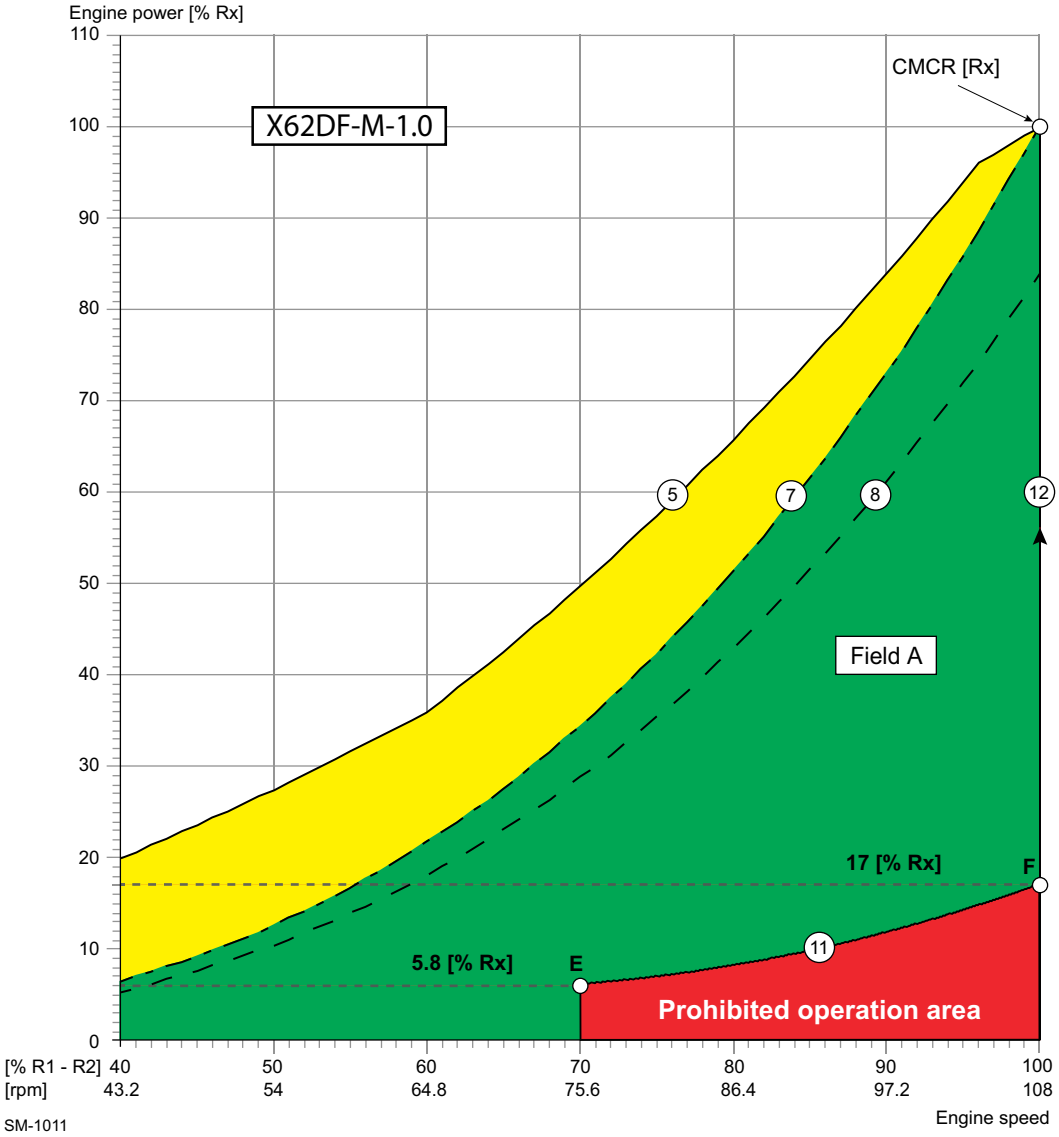

Figure 2-7 The prohibited operation area (CMCR speed = R1–R2)

NOTE	It is strictly forbidden for the engine to enter the prohibited operation area.

As shown in Figure 2-7, 🗎 2-14, the prohibited operation area of an engine is defined by an engine tuned to an R1–R2 speed. At this speed rating the restriction exists between 70% and 100% speed, with the required minimum engine power at the points of 5.8% and 17% respectively. These values are governed by the Formula 2-6, 🗎 2-15 for Line 11. If the CMCR speed rating of the engine is less than the R1–R2 speed, the required minimum power at this point is also calculated by the Line 11 equation.

Line 11

The lowest operational power limit, between 70% of R1–R2 speed and 100% CMCR speed, is defined by the following equation:

$$Line11 = 0.17 \times \left(\frac{n}{n_{R1-R2}} \right)^3$$

Formula 2-6

As calculated by this equation and shown in Figure 2-7, 🗎 2-14, at 70% of R1–R2 speed the minimum engine power equals approximately 5.8% of the CMCR power (point E). The minimum power requirement at 100% CMCR speed (point F) must be calculated depending on the engine rating. Examples of this calculation are shown further on.

Line 12

While operating at 100% CMCR speed, the allowed engine power can range between the minimum required power (point F) and 100% CMCR power.

Field A

The available design range of the engine is defined by Line 7, Line 11 and Line 12.

NOTE	For test purposes, the engine can run within the prohibited operation area for a maximum of 30 minutes during testing and sea trials. This operation is only permissible at low load and in the presence of authorised representatives of the engine builder. Further requests must be agreed upon by WinGD.

NOTE	The operational design range must respect the Barred Speed Range limits from torsional vibration.

Prohibited operation area for different speed rated engines

As the prohibited operation area of the engine is between 70% and 100% of the R1–R2 speed, the prohibited area is smaller when the speed rating of the engine is lowered.

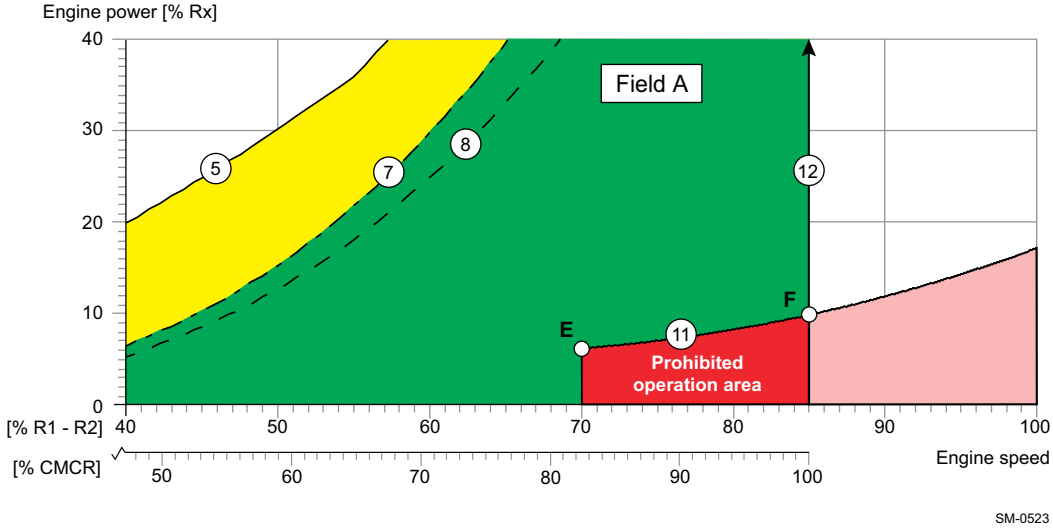

Figure 2-8 Calculating the prohibited operation area for the CMCR speed

Figure 2-8, 🗎 2-16 shows an engine with a CMCR speed which is rated at 85% of the R1–R2 speed and, thus, is only affected by a portion of the prohibited area of the R1–R2 speed range. The final graph for a CMCR at this speed is shown in Figure 2-9, 🗎 2-17.

Power / speed range for CMCR [Rx] = 85% R1–R2 speed

In Figure 2-9, 🗎 2-17, the engine CMCR speed is rated at 85% of the R1–R2 speed. At this speed a minimum engine power (point F) of 10.4% is required. Below this is the prohibited area of operation for the CPP at small (to zero) pitch and disconnected propeller.

Point E is always defined at 70% of the R1–R2 speed and has a minimum power of 5.8%, however, in Figure 2-9, 🗎 2-17 this equates to approximately 82% CMCR speed.

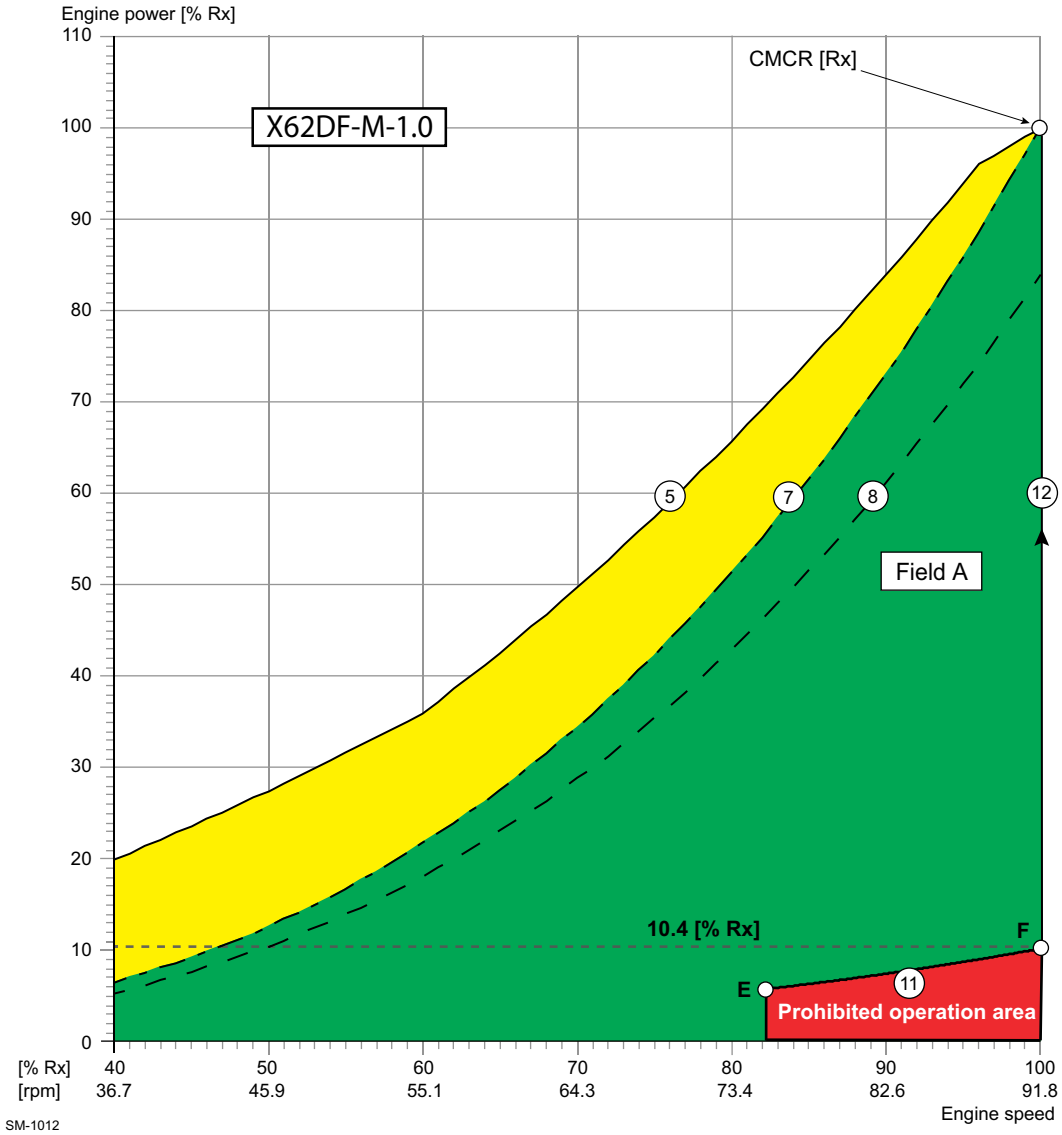

Figure 2-9 The prohibited operation area (CMCR speed = 85% of R1–R2)

Power / speed range for CMCR [Rx] = R3–R4 speed

In Figure 2-10, 🗎 2-18, the engine CMCR speed is rated at the R3–R4 speed. At this speed a minimum engine power (point F) of 7.4% is required. Below this is the prohibited area of operation for a disconnected propeller.

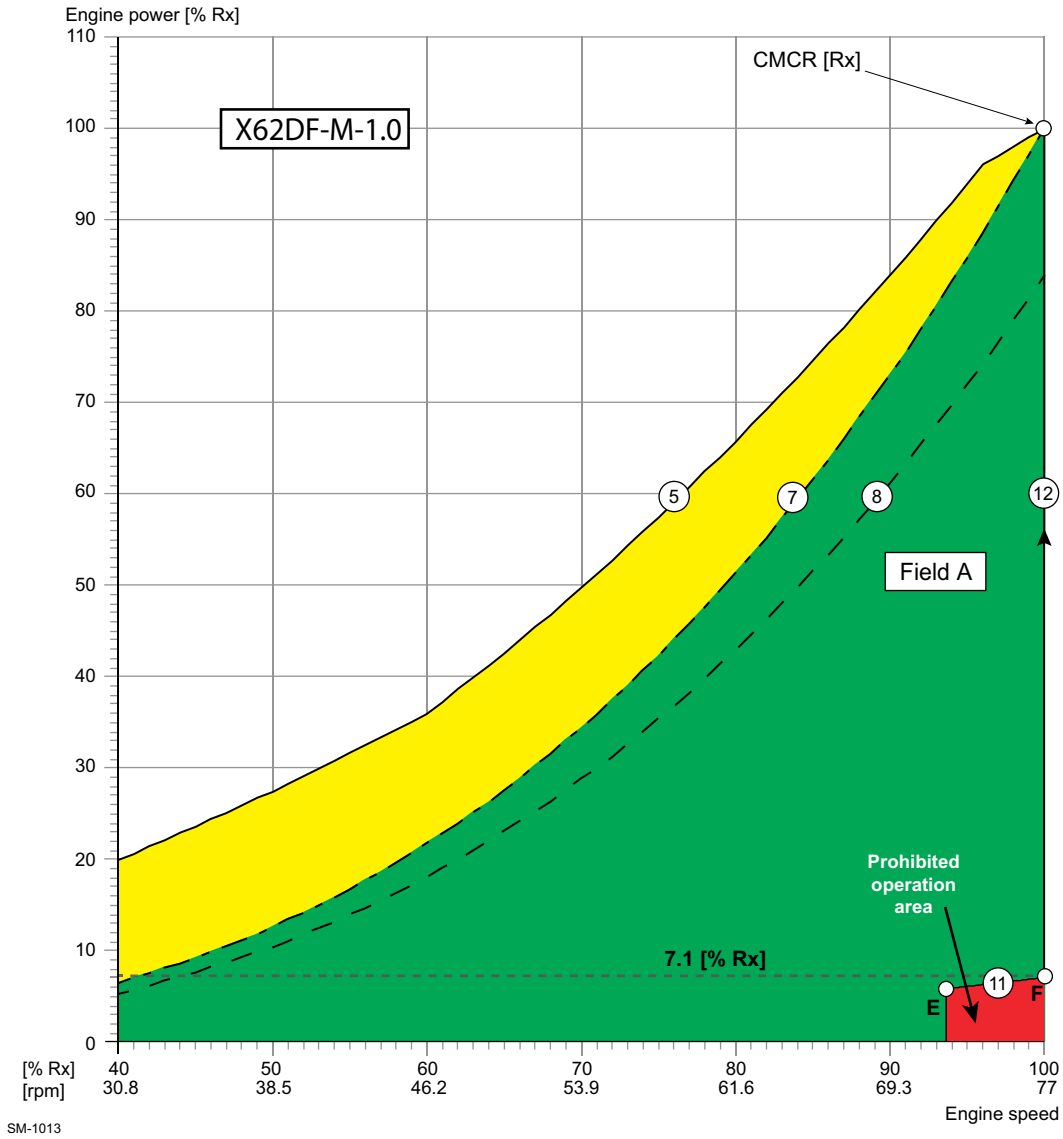

Figure 2-10 The prohibited operation area (CMCR speed = R3–R4)

2.8 CPP requirements for the Propulsion Control System

WinGD recommends including CPP control functions in the engine Remote Control System (RCS) from an approved supplier. This ensures that the requirements of the engine builder are strictly followed.

The following operating modes can be included in the Propulsion Control System (PCS):

- **Combinator mode 1**
  Such a combinator mode is used for operation without a shaft generator, or with a shaft generator and frequency control system. Any combinator curve including a suitable LR margin can be set in field A.
- **Combinator mode 2**
  Such an optional mode is used in connection with shaft generators. During manoeuvring the combinator curve is freely selected in field A. At sea the engine is operated at constant speed on Line 12, between point F and CMCR.

For manual and emergency operation, separate set-points for speed and pitch are usually provided. At any location allowing such operation, a plate must be placed with the following warning:

Engine must not be operated continuously at a pitch lower than xx% at any speed above 72 rpm.

The pitch value (xx) must be defined according to installation data.

For additional information on the CPP application in the PCS, see section 5.4.2 Recommended manoeuvring characteristics, 🗎 5-8.

Operation in the prohibited area

If the engine is operated for more than three minutes in the prohibited operation area, an alarm must be provided in either the main engine safety system or the vessel Alarm and Monitoring System (AMS).

If the engine is operated for more than five minutes in the prohibited operation area, the speed must be reduced below 72 rpm.

3 Engine Installation

The purpose of this chapter is to provide information to assist in the engine installation. It is for guidance only and does not supersede current instructions.

3.1 Engine dimensions and masses

Dimension and masses with iSCR

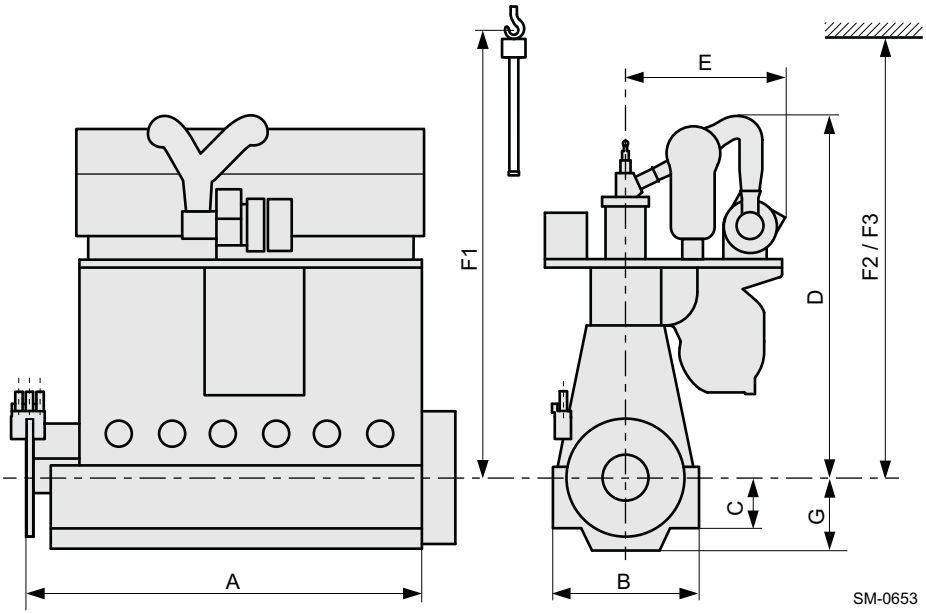

Figure 3-1 Engine dimensions with iSCR

Table 3-1 Engine dimensions and masses with iSCR

No. cyl.	Dimension in mm with a tolerance of approx. ±10 mm									Net eng. mass a)
	A	B	C	D	E	F1 b)	F2 c)	F3 d)	G	[tonnes]
5	7,000	4,200	1,360	9,580	Dim. depending on TC type	11,830	11,830	11,005	2,110	341
6	8,110									396
7	9,215									457
8	-	-	-	-		-	-	-	-	-
Min. capacity of standard crane: 4,800 kg **Min. capacity of double-jib crane e):** 2 x 2,575 kg										

a) Without oil / water; net engine mass estimated according to nominal dimensions given in drawings, including turbocharger and SAC, piping and platforms
b) Min. height for vertical removal of piston with standard crane
c) Min. height for vertical removal of piston with double-jib crane
d) Min. height for tilted removal of piston with double-jib crane
e) In cases of double-jib crane application, both hooks are used in parallel; special lifting tools are required. When selecting the double-jib lifting method, it must be considered that maintenance work will demand additional time and effort, especially for tilted removal (F3), compared to standard procedure (F1). Availability of the special lifting tools needs to be considered in the project schedule.

Dimension and masses without iSCR

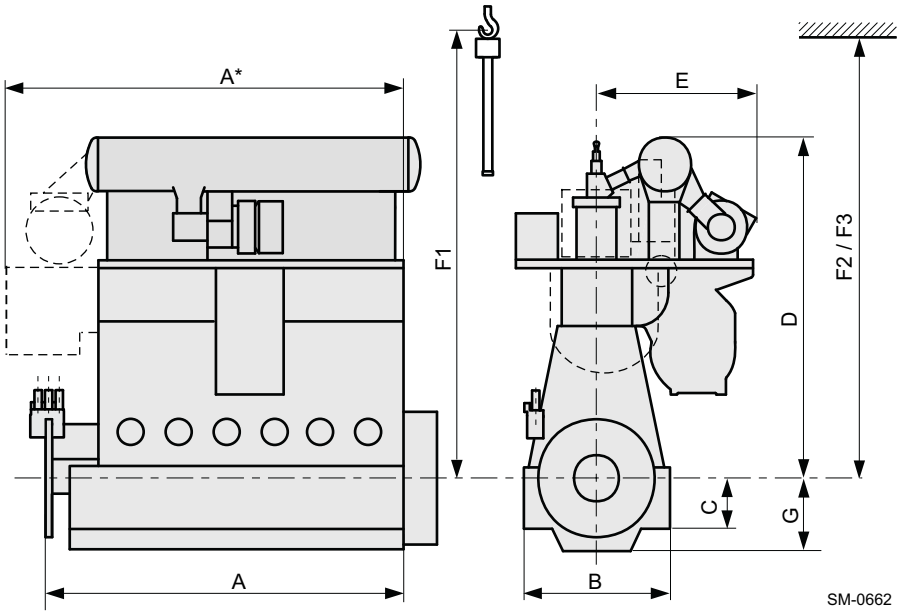

Figure 3-2 Engine dimensions without iSCR

Table 3-2 Engine dimensions and masses without iSCR

No. cyl.	Dimension in mm with a tolerance of approx. ±10 mm									Net eng. mass a)
	A	B	C	D	E	F1 b)	F2 c)	F3 d)	G	[tonnes]
5	7,000	4,200	1,360	9,580	Dim. depending on TC type	11,830	11,830	11,005	2,110	341
6	8,110									396
7	9,215									457
8	10,320									506
Min. capacity of standard crane: 4,800 kg **Min. capacity of double-jib crane e):** 2 x 2,575 kg										

a) Without oil / water; net engine mass estimated according to nominal dimensions given in drawings, including turbocharger and SAC, piping and platforms
b) Min. height for vertical removal of piston with standard crane
c) Min. height for vertical removal of piston with double-jib crane
d) Min. height for tilted removal of piston with double-jib crane
e) In cases of double-jib crane application, both hooks are used in parallel; special lifting tools are required. When selecting the double-jib lifting method, it must be considered that maintenance work will demand additional time and effort, especially for tilted removal (F3), compared to standard procedure (F1). Availability of the special lifting tools needs to be considered in the project schedule.

NOTE	The dimensions and masses provided in the above table are not binding. For the prevailing data, please refer to the relevant drawings, which are updated on a regular basis.

Project-specific dimensions and masses for the main components need to be requested from the engine builder.

3.1.1 Drawings and 3D CAD model availability

Over the course of the engine development, Design Groups (DG) become available with improving timeline accuracy. Initial concept DGs available for early engine development stages are updated to final concept DGs at the end stage. Concept design and final DGs can be mixed, however, final DGs contain more accurate data and supersede concept DGs.

In addition to the existing drawings, 3D CAD outline models for specific engines are available on WinGD web page: *Engine page*.

Table 3-3 Design groups of shipyard drawings and 3D CAD models

Design group	Title	MIM section
0812-01	Engine Outline View – Concept	3.2
0812-02	Engine Outline View	
0816-01	Dismantling Dimensions – Concept	3.1.2
0816-02	Dismantling Dimensions	
7602-01	Platform Outline View – Concept	3.3
7602-02	Platform Outline View	
8020	Pipe Connection Plan	4.9.1
9715	Engine Stays	3.8

3.1.2 Dismantling dimensions

Dimensions F1, F2, F3 in Figure 3-1, 🗎 3-1 and Figure 3-2, 🗎 3-2 and the corresponding tables are only for guidance and can vary depending on crane dimensions, handling tools or dismantling tolerances. If these values cannot be met or if more detailed information is required, please contact WinGD.

For further information, please refer to “DG 0816-01 Dismantling Dimensions – Concept” and final “DG 0816-02 Dismantling Dimensions” on WinGD web page: *Drawings – Dismantling Dimensions*.

3.1.3 Crane requirements

- An overhead travelling crane needs to be provided for normal engine maintenance (see Figure 3-1, 🗎 3-1 for crane capacity).
- The crane must conform to the requirements of the classification society.

NOTE	WinGD recommends the following general guidance for crane speeds: • two-speed hoist with a low-speed mode of 0.2–0.8 m/minute and a high-speed mode of 2.0–8.0 m/minute • two-speed horizontal movement with a low-speed mode of 1.0–4.0 m/minute and a high-speed mode of 4.0–8.0 m/minute.

3.1.4 Thermal expansion between turbocharger and exhaust gas piping

Before making expansion pieces enabling connections between the engine and external engine services, thermal expansion of the engine and turbocharger must be taken into account. The engine expansion is defined (from ambient temperature 20°C to service temperature 55°C) as follows (see also Figure 3-3, 🗎 3-4):

Expansion	Distance from ...
Transverse expansion (X)	... crankshaft centreline to centre of gas outlet flange
Vertical expansion (Y)	... bottom edge of bedplate to centre of gas outlet flange
Longitudinal expansion (Z)	... engine bedplate aft edge to centre of gas outlet flange

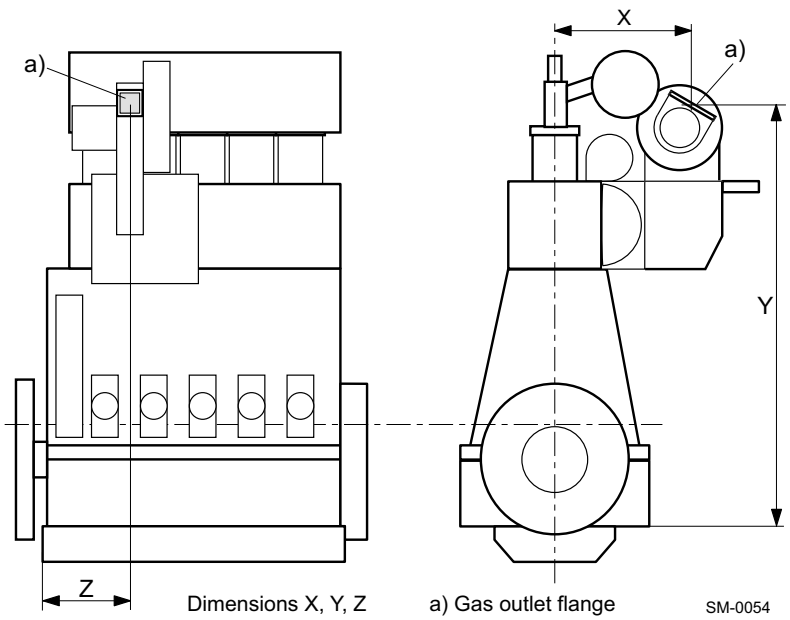

Figure 3-3 Thermal expansion, dim. X, Y, Z

Calculating thermal expansion

$\Delta x\ (\Delta y,\ \Delta z) = X\ (Y,\ Z) \bullet \alpha \bullet \Delta T$

where:

$\Delta x,\ \Delta y,\ \Delta z$ .. = thermal expansion

$X,\ Y,\ Z$ ..... = distance as per relevant pipe connection plan and outline drawing

α ..... = $1.15 \bullet 10^{-5}$ (coefficient of thermal expansion)

ΔT ..... = difference between service temperature and ambient temperature [°C]

NOTE	For thermal expansion values of the turbocharger, please refer to the turbocharger maker's specifications.

3.1.5 Content of fluids in the engine

For the quantity of a specific fluid in the engine, please refer to the relevant MIDS drawings as listed below:

- Fuel oil – *Fuel oil system*
- Lubricating oil – *Lubricating oil system*
- Cylinder cooling water – *Cooling water systems*
- Freshwater in scavenge air cooler – *Cooling water systems*.

3.2 Engine outline views

For the engine outline views, please refer to “DG 0812-01 Engine Outline View– Concept” and final “DG 0812-02 Engine Outline View” on WinGD web page: *Drawings – Engine Outline View*.

3.3 Platform outline views

For the platform arrangements, please refer to “DG 7602-01 Platform Outline View – Concept” and final “DG 7602-02 Platform Outline View” on WinGD web page: *Drawings – Platform Outline View*.

3.3.1 Minimum requirements for escape routes

The platforms are arranged in such a way to ensure safe escape routes for the crew according to the minimum requirements of classification societies. Special attention must be paid to ensure the minimum distance (sufficient headroom) between the ship platform and the lower engine platform (see Figure 3-4, 🗎 3-6).

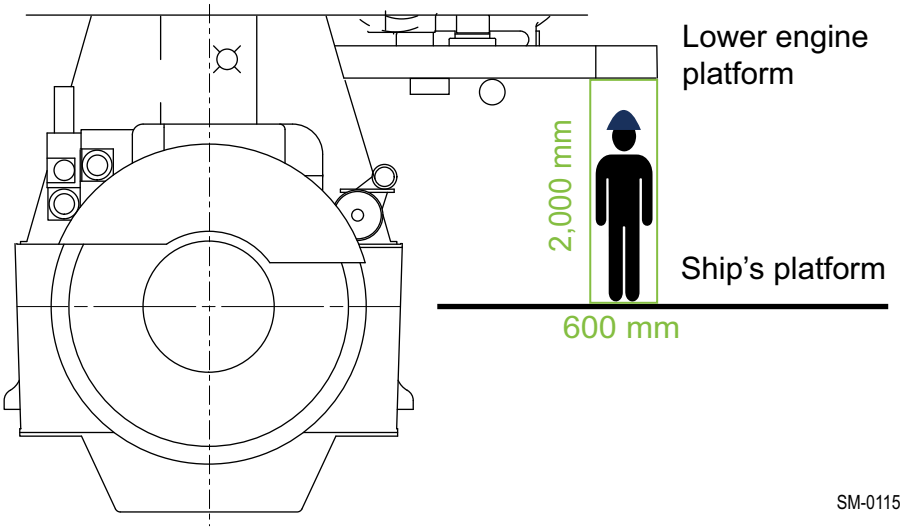

Figure 3-4 Minimum requirements for headroom

NOTE	The dimensions and distance between the ship platform and the lower engine platform must conform to the minimum requirements of classification societies. No dead ends can be created on the engine platforms by shipboard installations. If a dead end cannot be prevented, then an escape route leading to the ship platform must be made before the dead end. The maximum distance to the escape route must be 2,000 mm.

3.4 Engine foundation and seating

Engine seating is integral with the double-bottom structure. It must be of sufficient strength to do the following:

- to support the engine weight
- to transmit the propeller thrust
- to withstand external couples and stresses related to propeller and engine resonance.

NOTE	Before any seating work can be performed, make sure the engine is aligned with the intermediate propeller shaft.

The longitudinal beams under the engine must protrude from the engine room bulkhead by at least half the engine length, and aft as far as possible. The maximum allowable rake is 3° to the horizontal.

For further details on the engine seating, please refer to the relevant "DG 9710 Engine Seating and Foundation – Fitting Instruction" available on WinGD web page: *Fitting Instruction*.

The latest version of "DG 9710 Engine Seating and Foundation" is available on WinGD web page: *MIDS*.

3.4.1 Engine load and force transmission

The engine seating foundation is a structural part of the ship integrated into the double-bottom structure. It must be designed to absorb static and dynamic forces, vibrations and torques from the engine, shaft and propeller.

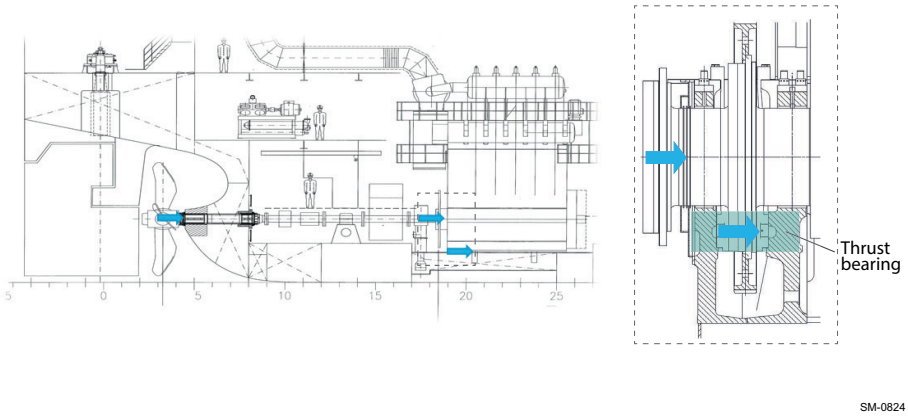

Figure 3-5 Force transmission to the engine foundation

The propulsion thrust is transmitted along the propulsion chain to the engine structure through the thrust bearing. Thrust sleeves are required to absorb the thrust force. In addition, the dynamic behaviour of engine forces requires a stiff engine seating foundation (see the standard bolting in Figure 3-7, 🗎 3-9).

3.4.2 Engine foundation layouts

Depending on the owner's requirements and on the ship design, a standard or a narrow engine foundation layout is possible for the engine seating foundation. The main difference between the two engine foundation layouts is the width of the lubricating oil drain tank underneath the engine (see Figure 3-6, 🗎 3-8).

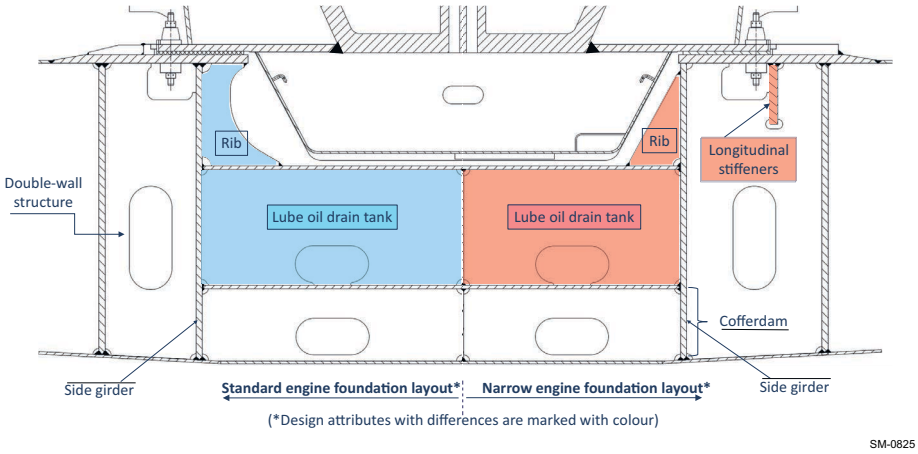

Figure 3-6 Comparison of the standard and narrow engine foundation layout

A summary of the advantages and disadvantages of the two engine foundation layouts is provided in Table 3-4, 🗎 3-8.

Table 3-4 Advantages and disadvantages of the standard and narrow engine foundation layouts

	Standard	Narrow
Advantages	• Forces are transmitted to the side girder. • Dynamic stresses on the bedplate welding seams are reduced. • Additional longitudinal stiffeners can be omitted. • It is easier for welding activities and less material is required.	• Less width is required for the installation which enables engine installation in the aft-most position. • Less oil volume is required for the same filling height.
Disadvantages	• More width is required for the installation which limits the flexibility of the engine installation position.	• Welding activities are more complicated due to the narrow space caused by the longitudinal stiffener

3.4.3 Engine installation and fixation

To ensure the engine fixation under all operating conditions, the engine must be effectively and permanently tightened down by foundation bolts. WinGD recommends to use thrust sleeves at the driving end. It has proven to be an easy, quick, and cost-efficient method for force transmission. A thrust sleeve is fitted to the bottom plate of the engine bedplate and to the foundation top plate. It serves as an interface for the transmission of various forces. The holes in the foundation top plate are pre-machined (e.g. flame-cut) with a larger diameter than the thrust sleeve. Then the thrust sleeve in the hole of the foundation top plate is fixed with epoxy resin (see Figure 3-7, 🗎 3-9). The foundation bolts are inserted in the thrust sleeve and tightened together with the same torque as the regular foundation bolts. Since thrust is transmitted by the thrust sleeves, no end stoppers are required. For the engine fixation, foundation bolts are installed without the thrust sleeve assembly parts.

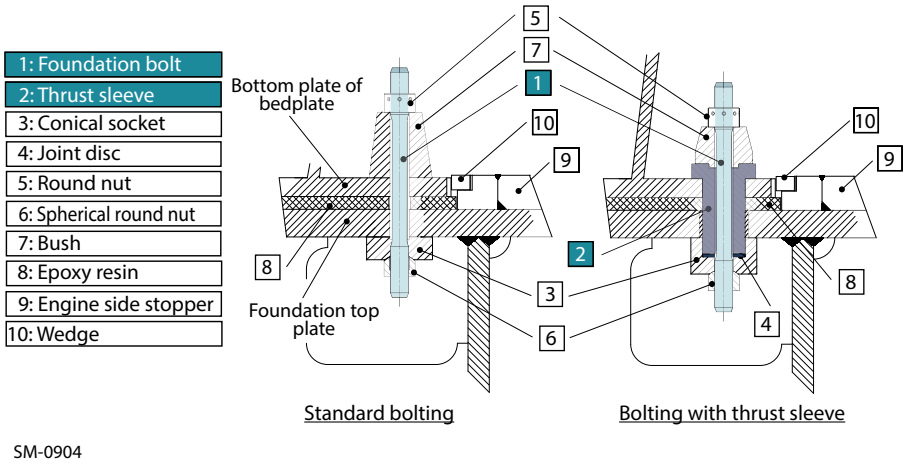

Figure 3-7 Foundation bolting

The classification society requires the use of side stoppers to prevent any lateral movement of the engine in case of collision. Different designs are possible for the side stoppers. WinGD proposes a welded type side stopper design (see Figure 3-8, 🗎 3-9).

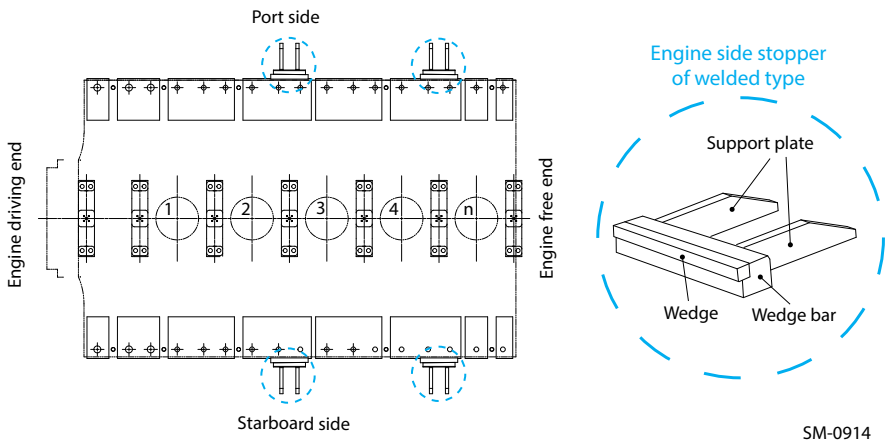

Figure 3-8 Welded type

The welding seam must be continuous over the entire length of the wedge. Specifications for the minimum number of side-stoppers and their positions are defined in the engine seating and foundation drawing. The minimum required contact surface of each wedge to the engine bedplate is also shown in the drawing.

The latest version of "DG 9710 Engine Seating and Foundation" is available on WinGD web page: *MIDS*.

For further details on the engine seating, please refer to the relevant "DG 9710 Engine Seating and Foundation – Fitting Instruction" available on WinGD web page: *Fitting Instruction*.

In some specific fitting conditions (e.g. when the foundation is directly connected to the bottom or to the cofferdam), the classification society requires the use of water-tight bolting for the engine fixation. In such cases use of water-tight bolting prevents the risk of flooding in the engine room (see Figure 3-9, 🗎 3-10).

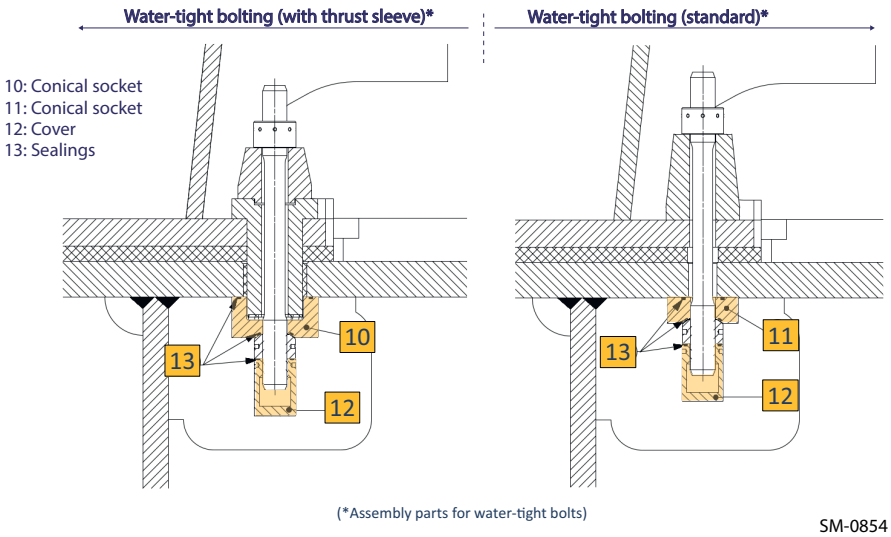

Figure 3-9 Proposed designs for water-tight bolting

3.5 Assembly

Engines can be installed as complete units or assembled from subassemblies in the vessel which can be afloat, in dry dock or on the slipway.

3.5.1 Assembly of subassemblies

When the engine seating has been approved, the bedplate is lowered onto blocks placed between the chocking points. The thickness of the blocks depends on the final alignment of the engine. Engine bedplates comprise fabricated sections with tapped holes for the jacking screws for engine alignment, and drilled holes to allow the passing of the holding-down bolts.

Checking the dimensions

- Proceed with the preliminary alignment of the bedplate using wedges or jacking screws.
- Position the engine coupling flange to the intermediate shaft coupling flange.
- Ensure that the gap between both flanges is close to the calculated figures and that both flanges are exactly parallel on the horizontal plane (max. deviation 0.05 mm).
- In the vertical plane, set the engine coupling flange 0.4–0.6 mm higher than the calculated figures.
- Place the bearing caps in position and install the turning gear.
- Ensure that the crankshaft deflections are as recorded in the “Engine Assembly Records”.
- Check the bedplate level in longitudinal and diagonal directions with a taut-wire measuring device provided by the engine builder.
- Compare the readings with those recorded at works.

NOTE	For checking the dimensions, optical devices or lasers can be used.

All final dimensions must be witnessed by the representatives of the engine builder and the classification society, and recorded on appropriate log sheets. Crankshaft deflections at this stage must correspond the values recorded at works.

- Temporarily secure the bedplate against unexpected movement.
- Continue engine assembly by mounting the columns, cylinder blocks, running gear and scavenge air receiver.
- Before tensioning the tie rods ensure that the bearing caps are loose.
- Make periodic checks of the crankshaft deflections to observe and correct any possible engine distortions.
- Carry out careful adjustments of the wedges or the jacking screws to re-establish the preliminary alignment setting.

NOTE	The process of using jacking screws and wedges is defined in *MIDS* and must be followed to prevent any damage.

Once the engine assembly is completed, the final alignment and chocking is carried out with the vessel afloat.

3.5.2 Installation of a complete engine

In case the engine is shipped in part deliveries and assembled at the shipyard before installation in the vessel, the shipyard must undertake assembly work according to the demands of the engine builder and the classification society.

NOTE	• Strict attention must be paid to removal of anti-corrosion coatings and subsequent application of rust preventing oil where required. • The alignment tools must be clean and ready for use.

Please observe the following:

- Engine mounting must be carried out systematically.
- The measurement readings must be recorded on appropriate log sheets and compared for correctness with the data in the "Engine Assembly Records" completed after test run in the manufacturer's works.
- The engine must be lowered onto blocks between the chocking points.
- The blocks must be set in such a way that the engine is slightly higher than the final position, because less effort is required to lower the engine than to raise it for alignment.
- For movements in the horizontal plane, both in lateral or longitudinal directions, the shipyard must construct appropriate anchor points for the use of hydraulic jacks. Such movements must be carried out with great care to avoid stresses and distortions to the bedplate.
- Regular crankshaft deflection readings must be taken to observe the effects. Any noticed deviation must be rectified immediately.

3.5.3 Installation of an engine from assembled subassemblies

Subassemblies of the engine can be assembled ashore before installation in the ship. Such an assembly can comprise the following components:

- bedplate
- main and thrust bearings
- crankshaft
- turning gear
- flywheel.

The placing on blocks and alignment to shafting is similar to the description in section 3.5.1 Assembly of subassemblies, 🗎 3-11.

3.5.4 Installation of an engine in ship on slipway

It is possible to install a complete or partially assembled engine in a ship under construction on an inclined slipway if attention is paid to the following:

- large components suspended to take account of the incline
- tie rods centred and exactly perpendicular to the bedplate before tightening
- side, fore and aft arresters temporarily fitted to prevent the engine from moving during launching of the ship
- additional temporary stays attached at upper platform level to steady the engine during launching.

3.6 Engine and shaft alignment

Alignment and chocking of the engine must be carried out in accordance with WinGD recommendations and are subject to test and inspection by the relevant classification society.

Each stage of engine mounting must be checked by qualified personnel and the measurements must be cross-checked with the design figures. In case of discrepancies the responsible parties (e.g. shipyard) must consult with the engine builder or WinGD.

3.6.1 Instructions and limits

Alignment can be done with either jacking screws or wedges.

For detailed alignment procedures, please refer to the latest version of "DG 9709 Engine Alignment" on WinGD web page: *Engine alignment*.

3.6.2 Tools

For "DG 9710-01 Engine Seating and Foundation – Engine Alignment Tools", please refer to the latest version of the respective drawings on WinGD web page: *Tool engine alignment*.

3.7 Engine coupling

3.7.1 Design

The design of coupling bolts and holes for the flange connection of crankshaft / propulsion shafts, as provided by "DG 3114 Connection Crank / Propeller Shaft", is included in the engine design approval by all major classification societies.

3.7.2 Machining and fitting of coupling bolts

- Before fitting the coupling bolts ensure that the mating flanges are concentric. Close the gap between the flanges completely by means of min. 4 temporary (non-fitted) bolts evenly distributed over the pitch hole diameter.
- Carry out drilling and reaming of the engine and shaft couplings by means of a computer controlled drilling machine or an accurately centred jig.
- In the case of non-matching holes or damaged holes apply joint cylindrical reaming to an oversize hole and then fit an individually machined bolt.
- The bolts must be available for inserting in the holes on completion of reaming. Each bolt must be stamped with its position in the coupling, with the same mark stamped adjacent to the hole. The following tolerances must be met:
  – bolt hole tolerance: H7
  – bolt tolerance: g6 (clearance fit).
- If there is any doubt that a fitted bolt is too slack or too tight, refer to the classification society surveyor and to the engine builder.

3.7.3 Tightening

- When tightening the coupling bolts it is essential to work methodically. Perform crosswise tightening, taking up the threads on opposite bolts to hand-tight, followed by sequential torque tightening. Finally ensure the same proper tightening for all bolts.
- Mark each bolt head in turn (1, 2, 3 etc.) and tighten opposite nuts in turn, according to the Tightening Instructions, making sure that the bolt head is securely held and unable to rotate with the nut.
- Lock castellated nuts, according to the Class requirements, with either locking wires or split pins. Use feeler gauges during the tightening process to ensure that the coupling faces are properly mated with no clearance.

3.7.4 Installation drawing

The latest version of "DG 3114 Connection Crank / Propeller Shaft" is available on WinGD web page: *Connection crank / propeller shaft*.

3.8 Engine stays

Ship vibrations and engine rocking caused by the engine behaviour (see chapter 6 Engine Dynamics, 🗎 6-1) are reduced by fitting lateral stays (see section 6.2 External lateral forces and moments, 🗎 6-7) and longitudinal stays (see section 6.3 Longitudinal vibration (pitching), 🗎 6-15).

The latest version of “DG 9715 Engine Stays” is available on WinGD web page: *MIDS*.

3.9 Propulsion shaft earthing

Electric current flows when a potential difference exists between two materials. The creation of a potential difference is associated with:

- *thermoelectric* induction by the application of heat
- *triboelectric* induction between interactive surfaces
- *electrochemical* induction when an electrolytic solution exists
- *electromagnetic* induction when a conducting material passes through a magnetic field.

Tracking or leakage currents are created in machinery by any of the above means and, if they are not adequately directed to earth, can lead to component failures, or in some cases result in fires and interference with control and monitoring instrumentation.

3.9.1 Preventive action

Using earthing brushes in contact with slip rings and bonding the chassis by braided copper wire are common ways of protecting electric machines. If operating loads and voltages are comparatively low, the supply is isolated from the machine by an 'isolating transformer', often with handheld power tools. The building specification dictates that the earthing procedure must be followed and the classification society must approve the final installation. On vessels with star-wound alternators the neutral is considered to be earth, and electrical devices are protected by automatic fuses.

Isolation of instrument wiring

Ensure that instrument wiring meets the building and classification society specifications and that it is shielded and isolated to prevent induced signal errors and short circuits.

In certain cases large items of machinery are isolated from their foundations, and couplings are isolated to prevent current flow, e.g. when electric motors are connected to a common gear box.

Retrospective fitting of earthing devices is not uncommon, but if tracking and leakage currents are expected, at the design stage adequate shielding of control equipment and earthing protection must be considered. Magnetic induction and polarisation must be avoided and degaussing equipment must be incorporated if a problem is possible.

3.9.2 Earthing device

Figure 3-10, 🗎 3-17 shows a typical shaft earthing device. The slip ring (1) is supplied as matched halves to suit the shaft. It is secured by two tension bands (2) using clamps (12). The slip ring mating faces are finished flush and butt jointed with solder. The brushes (4) are housed in the twin holder (3) clamped to a stainless steel spindle (6), and there is a monitoring brush (11) in a single holder (10) clamped to an insulated spindle (9). Both spindles are attached to the mounting bracket (8).

Conducting material for slip rings

Different combinations of conducting material are available for the construction of slip rings. However, alloys with a high silver content are considered efficient and hard-wearing.

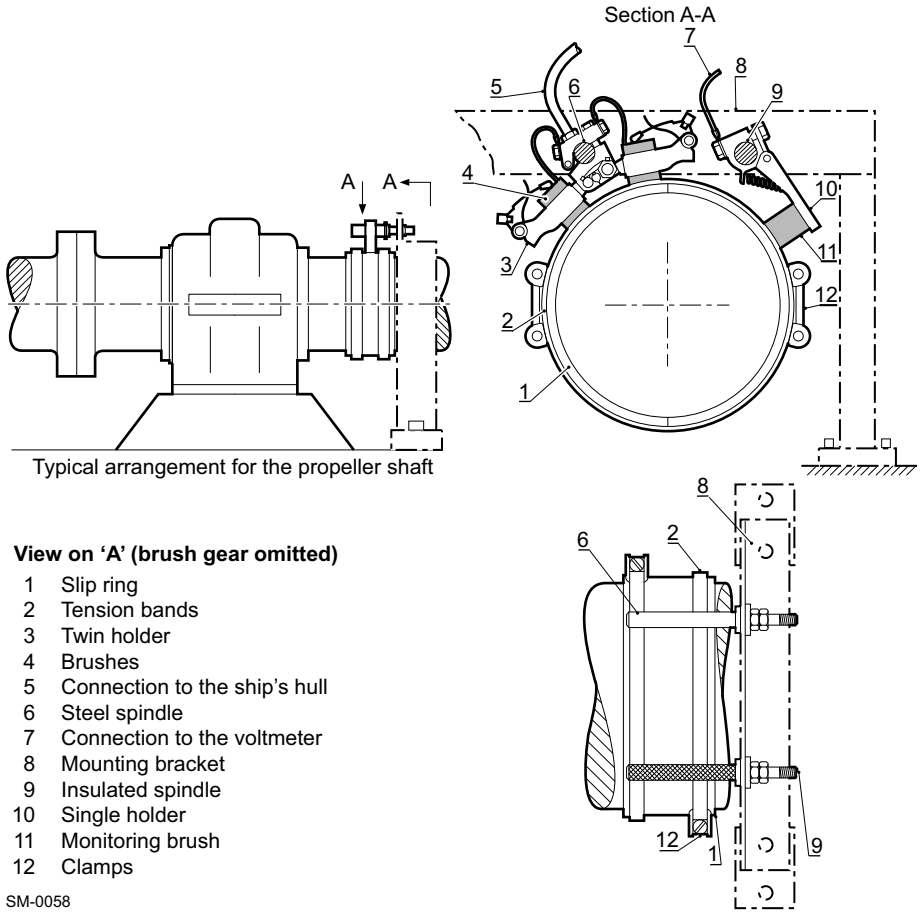

Figure 3-10 Typical shaft earthing arrangement

Position of earthing device on shaft

The earthing device must be as close as possible to the main engine flywheel. For installation of a PTO/PTI/PTH on the driving end side, the earthing device must be placed between the PTO/PTI/PTH and the main engine flywheel.

NOTE	An additional earthing device might be required to protect the shaft bearings and the stern tube bearings. For detailed information, please contact the earthing device supplier.

Connecting electric cables

The electric cables are connected as shown in Figure 3-11, 🗎 3-18 with the optional voltmeter. This instrument is at the discretion of the owner, but it is useful to observe that the potential to earth does not rise above 100 mV.

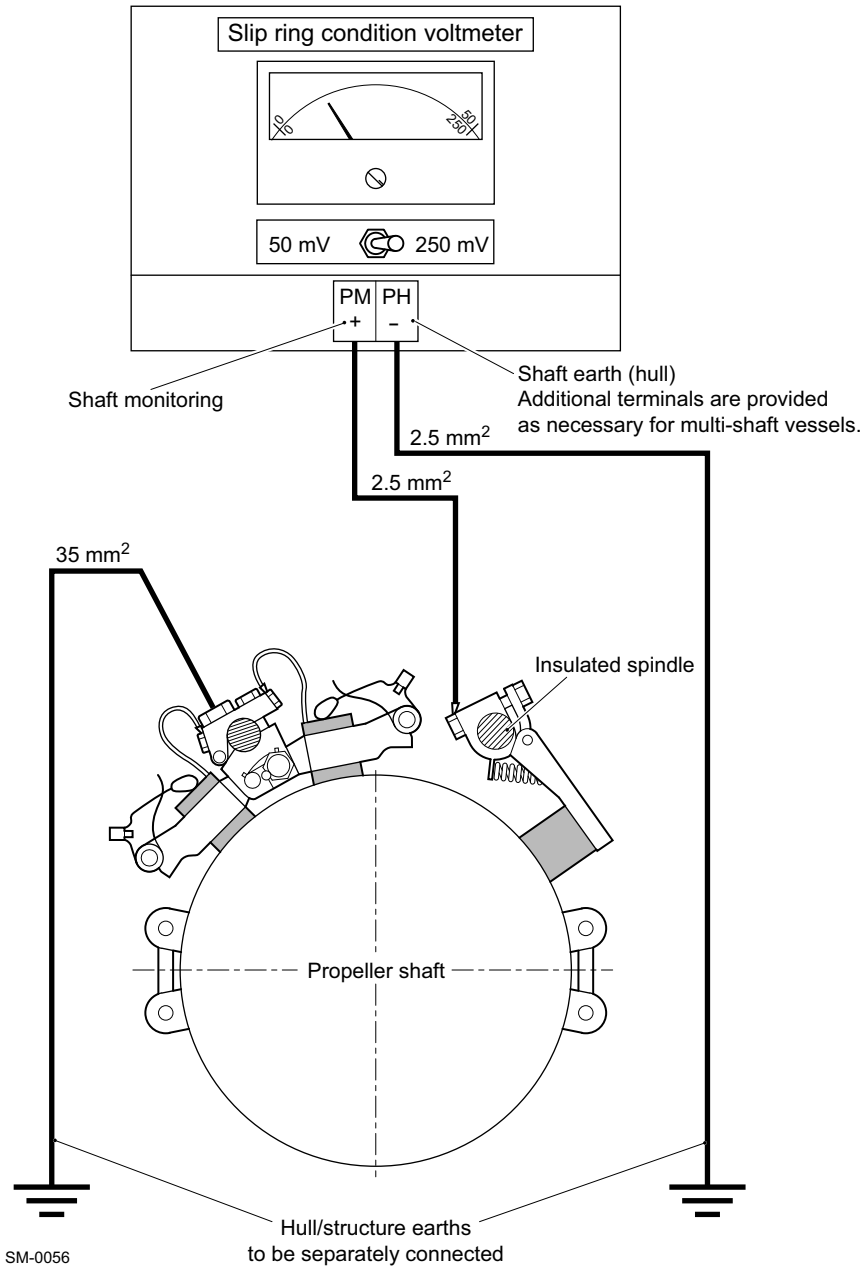

Figure 3-11 Typical shaft earthing with condition monitoring facility

3.10 Twin-engine propulsion

Twin engines are used in many applications depending on design rules and the customer's requirements. This layout offers increased system redundancy, permitting one engine to be taken out of service without disabling the ship. Such work is common during a port stay with one engine on standby, while maintenance is performed on the other.

WinGD recommends that a shaft-locking device is added to all twin-engine installations (see Figure 3-12, 🗎 3-19).

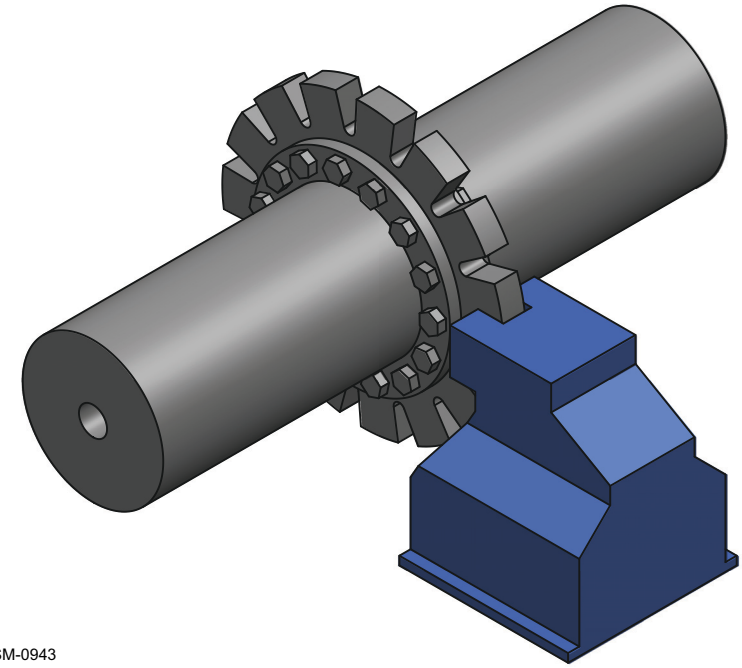

Figure 3-12 Example of a shaft-locking device

NOTE	• During ship design, the impact of vibration by operating the twin-engine vessel with only one running engine while the other engine is connected to locked shaft must be checked by a Torsional Vibration Calculation. The Torsional Vibration Calculation must consider the higher absorbed propeller power. • During ship operation, with only one of the twin-engines in operation while the other is connected to a windmilling propeller, no engine must be operated in the barred speed range, neither the windmilling nor the running engine. The barred speed range does not change if an engine is actively running or windmilling. For further details, see section 6.4 Torsional vibration, 🗎 6-17.

3.11 Fire protection

Fires can develop in areas, such as scavenge air receiver / piston underside. The engine is fitted with a piping system which leads the fire extinguishing agent into the critical areas.

Where fire protection is required, the final arrangement of the fire extinguishing system must be submitted for approval to the relevant classification society.

For this engine, the machinery space and the fuel preparation space, where methanol-fuelled engines or components are installed, must be equipped with an approved fixed fire-extinguishing system in accordance with the IMO MSC.1/Circ.1621 requirements.

Extinguishing agents

Considering methanol characteristics, various extinguishing agents can be considered for fire fighting purposes. They are selected either by the shipbuilder or the ship owner in compliance with the rules of the classification society involved.

Steam as an alternative fire extinguishing medium is permissible for the scavenge air spaces of the piston underside. However, it can cause corrosion if countermeasures are not taken immediately after its use.

These countermeasures comprise:

- opening scavenge spaces and removing oil and carbon deposits
- drying all unpainted surfaces and applying rust protection (i.e. LO).

NOTE	If steam is used for the scavenge spaces, a water trap is recommended at each entry to the engine. It must be assured that steam Shut-Off Valves are tight when not in use.

Table 3-5 Recommended quantities of fire extinguishing medium

Piston underside and scavenge air receiver		Bottle		Number of cylinders			
				5	6	7	8
Volume [m^3/cyl]	Mass [kg/cyl]	Size [kg]	Extinguishing medium	Quantity of fire extinguishing bottles			
6	22	45	Carbon dioxide (CO_2)	3	3	4	4

For further information about methanol fire prevention, detection and control, please refer "DG 9728 Methanol Fuel System – Concept Guidance" available on WinGD web page: *Concept Guidance for X-DF-M.*

3.12 Conditions and requirements

3.12.1 Pressure and temperature ranges

For the information on pressure and temperature ranges, please refer to the document available on WinGD web page: *Usual values and safeguard settings*.

For signal processing, see section 5.6.1 Signal processing, 🗎 5-12.

3.12.2 Operating conditions

The engine can be operated without any restrictions in the ambient condition range 'winter', as permissible by *GTD*, up to the design conditions. Operation outside these limits is possible, but further measures need to be taken and the power output can be limited (see 4.8.4 Outside ambient air temperature, 🗎 4-68). For project-specific support, please contact WinGD.

Reference conditions

Engine performance data, like Brake Specific Energy Consumption (BSEC), Brake Specific Exhaust gas Flow (BSEF), Temperature Exhaust gas after Turbocharger (tEaT), etc., are based on reference conditions. These conditions are specified in ISO standard 15550 (core standard) and, for marine application, in ISO standard 3046 (satellite standard) as follows:

Air temperature before blower	25°C
Engine room ambient air temperature	25°C
Coolant temperature before scavenge air cooler	25°C
Barometric pressure	1,000 mbar
Relative humidity	30%

Design conditions

The capacities of ancillaries are specified according to ISO standard 3046-1 (clause 11.4) following the International Association of Classification Societies (IACS) and are defined as design conditions:

Air temperature before blower	45°C
Engine room ambient air temperature	45°C
Coolant temperature before scavenge air cooler	36°C
Barometric pressure	1,000 mbar
Relative humidity	60%

3.12.3 Ancillary systems design parameters

The layout of the engine ancillary systems is based on the engine rated performance (rating point Rx, Contracted Maximum Continuous Rating (CMCR)). Several parameters must be considered to ensure proper function of the engine and its ancillary systems.

Cylinder cooling water and system oil temperatures

The cylinder cooling water outlet and system oil inlet temperatures must be controlled in the relevant ancillary system to remain within the following specified levels:

Cylinder cooling water outlet temperature	90°C
Oil temperature before engine	45°C

Exhaust gas back pressure

The system layout back pressure design limits listed below are based on a new and clean exhaust gas system. The operational limits must be maintained under normal operational conditions which includes some fouling.

Exhaust gas back pressure at rated power (Rx), independent from the operating mode:	
• without additional exhaust gas treatment:	30 mbar
° design limit	50 mbar
° operational limit	
• with additional exhaust gas treatment	
° design limit	60 mbar
° operational limit	80 mbar

3.12.4 Electrical power requirement

Table 3-6 Electrical power requirement

No. cyl.	Power requirement [kW]	Power supply
Auxiliary blowers [a)]		
5	2 x 43	440 V / 60 Hz
6	2 x 52	
7	2 x 60	
8	2 x 67	
Turning gear		
5	5.5	440 V / 60 Hz
6	5.5	
7	5.5	
8	5.5	
Engine control system		
5	0.7	220 V / 60 Hz
6	0.7	
7	0.8	
8	0.9	
Trace heating of injection pipes		
5	2.7	220 V / 60 Hz
6	3.3	
7	3.8	
8	4.3	
Propulsion control system		
All	Acc. to the maker's specifications	24 VDC (UPS)
Additional monitoring devices (e.g. oil mist detector etc.)		
All	Acc. to the maker's specifications	

a) Minimal electric motor power (shaft) is indicated. Actual electric power requirement depends on size, type and voltage / frequency of installed electric motor. Direct starting or Star-Delta starting must be specified when ordering.

4 Ancillary Systems

Sizing the ancillary systems of the engine, i.e. for freshwater cooling, Lubricating Oil (LO), fuel oil, etc. depends on the contracted maximum engine power. If the expected system design is out of the scope of this Manual (MIM), contact our representative or WinGD directly.

The *GTD* application provides data for estimating the size of ancillary equipment and enables all engine and system data at any Rx rating within the engine rating field to be obtained. However, for convenience or for final confirmation when optimising the plant, WinGD provides a computerised calculation service.

NOTE	All pipework systems must be flushed and proved clean before commissioning.

All pipework systems and fittings must conform to the requirements laid down by the legislative council of the vessel country of registration and the classification society selected by the owners. They must be designed and installed to accommodate the quantities, velocities, flow rates and contents identified in the MIM. They must be set to work in accordance with the build specification as approved by the classification society and protected at all times from ingress of foreign bodies.

4.1 Twin-engine installation

A vessel equipped with two separate main propulsion engines is considered a twin-engine installation. The installation of two WinGD 2-stroke engines allows combining individual engine auxiliary systems. WinGD provides information based on the engines requirements (see Table 4-1, 🗎 4-2). Class and other binding rules can take precedence.

Table 4-1 Common and independent systems in twin-engine installations

System	Independent system for each engine required	Common system possible	Remarks
Low-temperature cooling water system (Figure 4-1, 🗎 4-3)		X	**Parallel independent** low-temperature cooling water supply per engine to the scavenge air coolers **from common** low-temperature cooling water circuit
		X	**Parallel independent** low-temperature cooling water supply per engine to the lubricating oil cooler and high-temperature cooling water cooler **from common** low-temperature cooling water circuit
High-temperature cooling water system	X		
Main lubricating oil system	X		
Cylinder lubricating oil system (Figure 4-9, 🗎 4-21 and Figure 4-10, 🗎 4-22)		X	Day tanks for high- and low-base-number lubricating oil respectively
		X	Rising pipe
	X		Separate distribution to each engine
Fuel oil system	X[a)]	X[b)]	Feed system
	X	(X)	Booster circuit systems
Methanol fuel system		X	Methanol Fuel Supply System (FSS)
	X		Fuel Valve Unit (FVU)
Air supply system	X		
Control air		X	Supply system
Leakage collection system and washing devices	X		
Exhaust gas system	X		
Engine purging pipes	X		
X = proven solution (X) = alternative solution, if specific conditions are met			

a) Independent systems required if a fuel flexibility for both engines is specified, meaning that the engines can independently operate in methanol mode and diesel mode.

b) Common system possible if no fuel flexibility is specified, meaning that both engines can only run with the same fuel oil which must be MGO or MDO, i.e. if one engine operates in methanol mode, the other engine cannot operate with HFO.

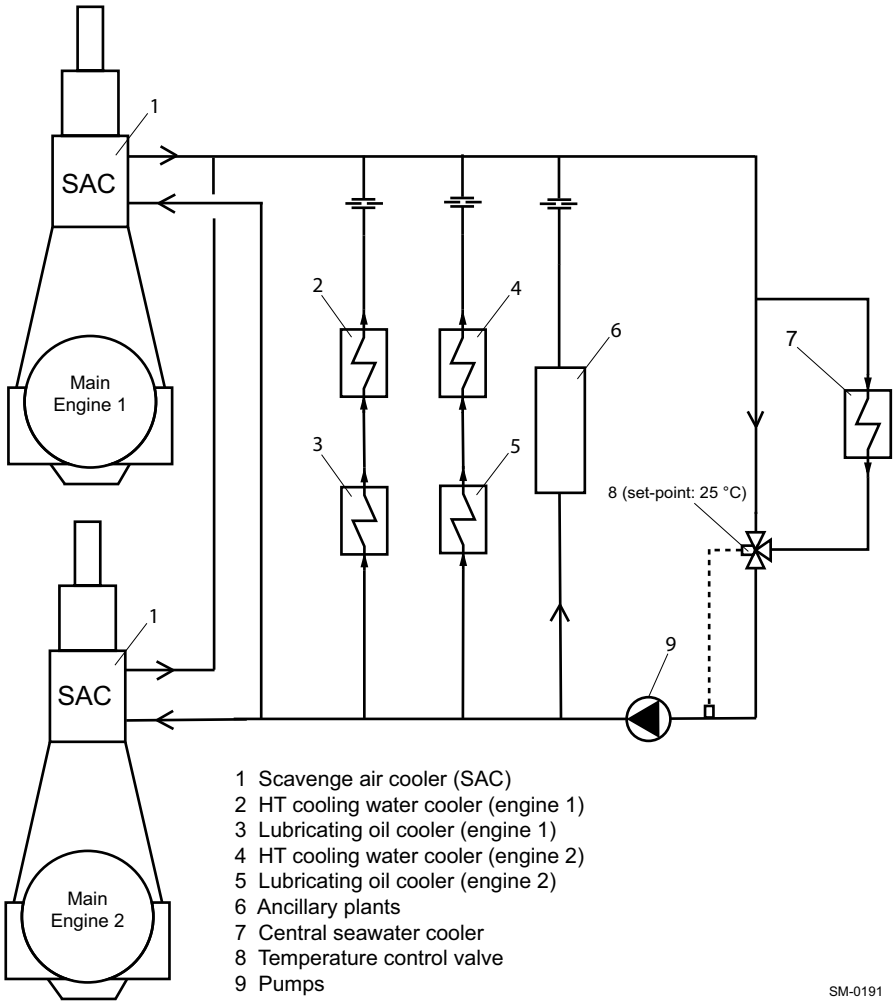

Figure 4-1 Low-Temperature cooling water system for twin-engine installation

4.2 Cooling water system

The latest version of the MIDS "DG 9721 Cooling Water Systems" is available on WinGD web page: *MIDS*.

Freshwater cooling system

The main engine High-Temperature (HT) and Low-Temperature (LT) cooling circuits use freshwater as their cooling medium. As such, the HT and LT circuits are integrated in the ship central freshwater cooling system.

Advantage of freshwater over seawater

Freshwater cooling systems reduce the amount of seawater pipework and problems associated with it, like scaling and corrosion. Freshwater provides for more efficient cooling as it allows a higher heat load than seawater, i.e. freshwater can be heated up to a higher temperature level and, along with a lower flow rate, allows the same cooling effect to be obtained. Thus, the overall running costs are reduced.

Separate High-Temperature circuit with own cooler

The central freshwater cooling system runs with single-stage SAC and separate HT circuit. The HT circuit must be completely separate from the LT circuit. A dedicated HT water cooler is applied for heat exchange between HT and LT circuit without flow medium mixing. Figure 4-2, 🗎 4-4 shows the general installation principle.

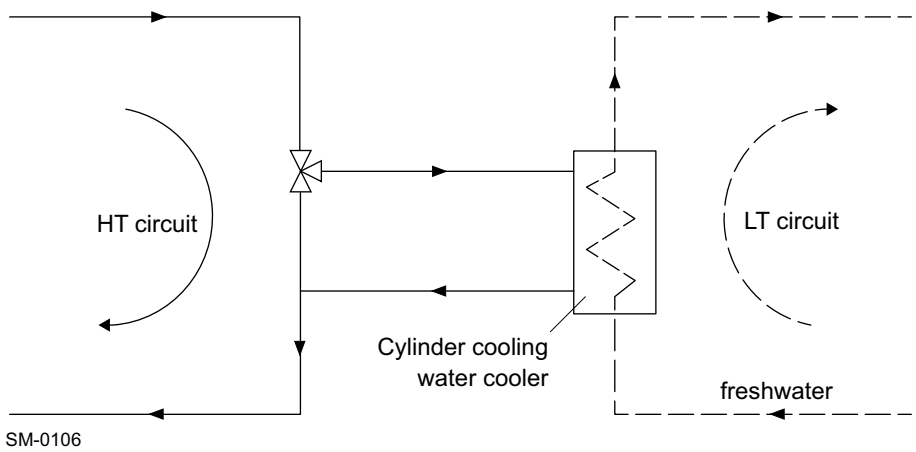

Figure 4-2 Separate High-Temperature cooling water circuit

NOTE	For detailed cooling design and the necessary data for this arrangement, please refer to MIDS and GTD respectively.

4.2.1 Low-temperature circuit

The LT cooling water circuit for the main engine provides cooling for the SAC, the LO cooler, the MDO/MGO cooler as well as for the methanol injector cooling system during diesel mode.

Setting of automatic temperature control valve for cooling water

For the main engine SAC the set-point of the automatic temperature control valve can be between 10°C and 36°C. Low cooling water temperature results in low scavenge air temperature and, consequently, low Brake Specific Fuel Consumption (BSFC) and Brake Specific Energy Consumption (BSEC). Thus, WinGD recommends a set-point of 25°C.

In cold seawater the automatic temperature control valve restricts the flow to the seawater and its cooling effect to maintain the freshwater at the set temperature. If the seawater is warmer, it can be unable to reduce the freshwater to the set temperature, even when the automatic temperature control valve is fully open. In such cases the freshwater is cooled down to a temperature 4°C above that of seawater, e.g. to 36°C when the seawater temperature is 32°C.

Arrangements of Low-Temperature cooling water circuit

Depending on the ancillary equipment and the temperature set-point selection, the LT circuit can be typically installed in the following arrangements:

- Arrangement 1: Single set-point temperature (see Figure 4-3, 🗎 4-6)
- Arrangement 2: Dual set-point temperatures (see Figure 4-4, 🗎 4-6)
- Arrangement 3: Separate SAC cooling circuit (see Figure 4-5, 🗎 4-7).

Arrangement 1

To maintain the required SAC inlet temperature, the automatic temperature control valve of the central freshwater cooling system is set between 10°C and 36°C (as per WinGD specification). In this arrangement the ancillary plant and other cooler temperatures are controlled and maintained by this single temperature set-point.

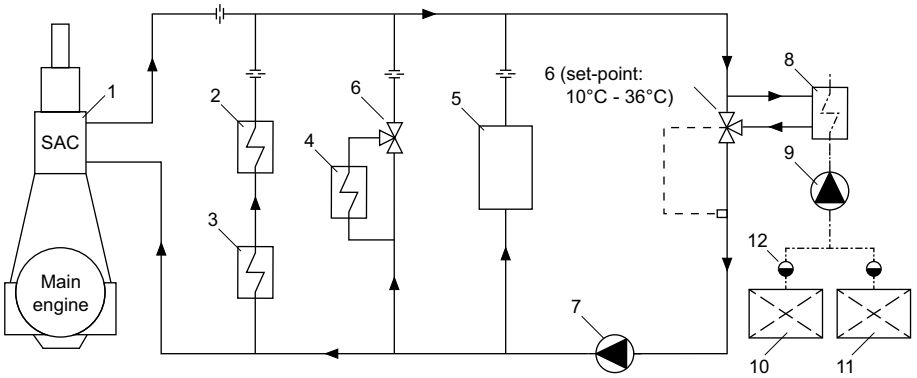

1 Scavenge air cooler (SAC)
2 HT cooling water cooler
3 Lubricating oil cooler
4 MGO/MDO cooler
5 Ancillary plants
6 Automatic temperature control valve
7 LT cooling water pump
8 Central seawater cooler
9 Seawater circulating pump
10 Low sea chest
11 High sea chest
12 Seawater strainer

SM-0657

Figure 4-3 Low-Temperature cooling water circuit: single set-point temperature

Arrangement 2

The central freshwater cooling system is separated into different cooling streams to provide different temperature set-points for the main engine SAC and ancillary equipment. To maintain the required SAC inlet temperature, the automatic temperature control valve of the central freshwater cooling system must be set to between 10°C and 36°C (as per WinGD specification). The ancillary plant temperature control valve can be set differently as the specific project requires, e.g. between 25°C and 36°C.

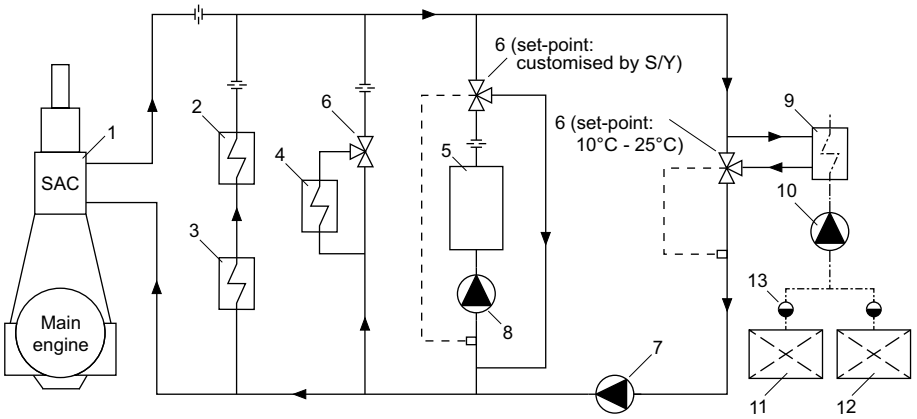

1 Scavenge air cooler (SAC)
2 HT cooling water cooler
3 Lubricating oil cooler
4 MGO/MDO cooler
5 Ancillary plants
6 Automatic temperature control valve
7 LT Cooling water pump
8 Cooling water pumps for ancillary plant
9 Central seawater cooler
10 Seawater circulating pump
11 Low sea chest
12 High sea chest
13 Seawater strainer

SM-0658

Figure 4-4 Low-Temperature cooling water circuit: dual set-point temperatures

Arrangement 3

The central freshwater cooling system is separated into two dedicated cooling circuits to better manage the varying temperature set-points. This includes:

- **Circuit 1:** The main engine SAC is cooled with freshwater with a temperature set-point of between 10°C and 36°C (as per WinGD specification). In this arrangement only the main engine SAC requires maximum design seawater flow for cooling.
- **Circuit 2:** All other main engine and ancillary plant coolers are cooled with freshwater with a set-point customised by the shipyard or ship designer.

Figure 4-5, 🗎 4-7 is a proposal only and the seawater pump and other equipment layout can be different. As such, the shipyard is free to design their own seawater system. However, the set-point temperature for the main engine SAC must be 10°C and 36°C (as per WinGD specifications).

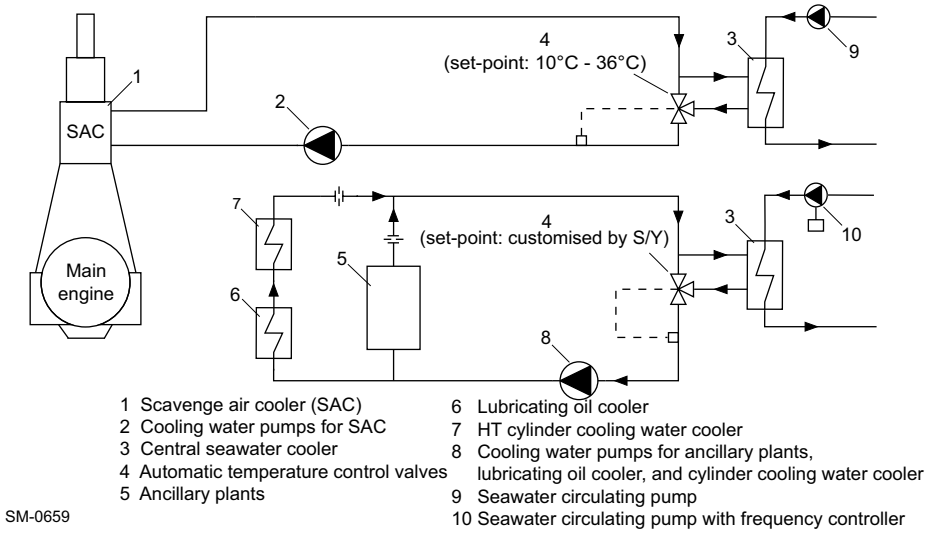

Figure 4-5 Separate Scavenge Air Cooler and Low-Temperature cooling circuits

Low-Temperature circuit components

Seawater circulating pump

The seawater circulating pump delivers seawater from the high and low sea chests to the central seawater cooler.

Pump type	Centrifugal
Capacity	According to *GTD*: The seawater flow capacity covers the need of the engine only and must be within a tolerance of 0% to +10% of the GTD value
Delivery pressure	Determined by system layout
Working temperature	According to ship specification

Seawater strainer

Simplex or duplex strainers must be fitted at each sea chest and arranged to enable manual cleaning without interrupting the flow. The strainer mesh size (max. 6 mm) must prevent the passage of large particles and debris that could damage the pumps and impair the heat transfer across the coolers.

Central seawater cooler

Cooler type	Plate or tubular
Cooling medium	Seawater
Cooled medium	Freshwater
Design criterion	Keeping max. 36°C LT while seawater temperature is 32°C
Margin for fouling	10%–15% must be added
Heat dissipation	Refer to *GTD*
Freshwater flow	
Seawater flow	
Temperatures	

Automatic temperature control valve

As stated above, the automatic temperature control valve for the cooling water can be set between 10°C and 36°C. WinGD recommends a set-point of 25°C, however, the shipyard can determine this with consideration of the other equipment in the central cooling system.

Valve type	Electrically or electro-pneumatically actuated three-way type (butterfly valves are not adequate) having a linear characteristic
Design pressure	5 bar
Test pressure	Refer to specification laid down by classification society
Pressure drop across valve	Max. 0.5 bar
Controller	Proportional plus integral (PI)
Temperature sensor	According to control valve manufacturer's specification; fitted in engine outlet pipe

Freshwater pumps

Pump type	Centrifugal
Capacity	According to *GTD*: The freshwater flow capacity covers the need of the engine only and must be within a tolerance of 0% to +10% of the GTD value
Delivery head	The final delivery head is determined by the layout of the system and must ensure that the inlet pressure to the scavenge air cooler(s) is within the range of summarised data
Working temperature	According to ship specification

4.2.2 High-Temperature circuit

Based on experience and technological development, the High-Temperature (HT) cooling circuit has been simplified. It consists of a single inlet for the cooling water flowing through the cylinder liner and cover in sequence. The schematic drawing (Figure 4-6, 🗎 4-9) shows the basic cooling water circuit arrangement.

Air separator

An air separator is designed as an engine component and arranged upstream from the engine HT cooling water outlet connection. The air separator separates air from water and vents the air out. Removal of air from the cooling water is essential to maintain an optimal cooling effect of the engine cylinder liner.

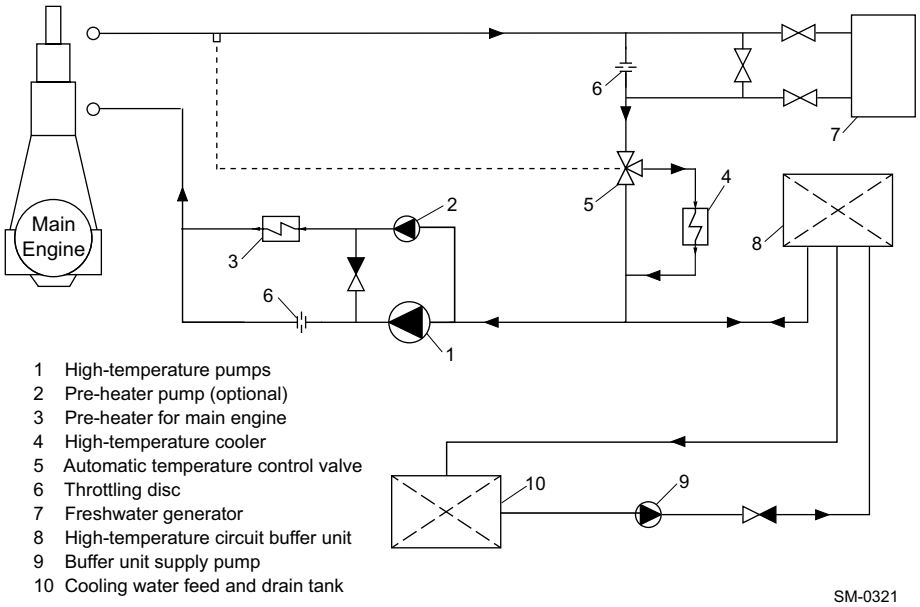

Figure 4-6 High-Temperature cooling water circuit

High-Temperature circuit components

Automatic temperature control valve

Valve type	Electrically or electro-pneumatically actuated three-way type (butterfly valves are not adequate) having a linear characteristic
Design pressure	5 bar
Test pressure	Refer to specification laid down by classification society
Pressure drop across valve	Max. 0.5 bar
Controller	Proportional plus integral (PI) known as proportional plus reset for steady state error of max. ±2°C and transient condition error of max. ±4°C
Temperature sensor	According to control valve manufacturer's specification; fitted in engine outlet pipe

High-Temperature cooling water pump

Pump type	Centrifugal, preferably with a steep head curve [a)]
Pump capacity	According to *GTD*: The flow capacity must be within a tolerance of -10% to +20% of the GTD value
Delivery head [b)]	To be determined according to the total pressure losses (resistance) of the actual piping installation arrangement
Working temperature	95°C

a) As a guide, the minimum advisable curve steepness can be defined as follows: For a pressure increase from 100% to 107%, the pump capacity must not decrease by more than 10%.

b) The pump delivery head (p_p) is:

$$p_p = p_{ei} - p_{st} + \Delta p + \frac{h}{10.2} \quad \text{[bar]}$$

where:

p_{ei} = pressure at engine inlet [bar]
p_{st} = static pressure* at pump inlet [bar]
Δp = pressure losses over piping between pump outlet and engine inlet [bar]
h = height difference between pump outlet and engine inlet [m]

* If an expansion tank is used, p_{st} equals the static pressure head from the change in height between expansion tank and pump inlet.
If a buffer unit is used, p_{st} equals the buffer unit pressure plus the pressure head from the change in height between buffer unit and pump inlet.

The pressure (p_{ei}) at engine inlet must be 2.0–4.0 bar(g).

To supply the cooling water system with desired static pressure and compensate for the cooling water volume change during engine operation, WinGD proposes two possible solutions, namely installing either an expansion tank or a buffer unit.

Expansion tank

To ensure that the required static head is applied to the Cylinder Cooling Water (CCW) system, the expansion tank must be fitted at least 3.5 m above the highest point of the engine cooling water piping. The tank must be connected by a balance pipe to the CCW pump suction.

Buffer unit

The installation of a buffer unit is an alternative solution. The buffer unit has the advantage of variable static pressure settings and location flexibility. However, it requires an additional water supply pump.

Main components and functionalities of the buffer unit:

- **Control air SOV** (DN15), solenoid type, controlled by the signal from the Level Switch Low (LSL). This valve is normally open but needs to be shut off when the signal from the LSL is triggered and water feeding is started.
- **Control air pressure regulating valve** (DN15) with pressure reduction and air release function. This valve reduces the control air pressure to the desired buffer unit pressure. It enables air to be released to maintain the pressure when the buffer unit water volume is increasing (refill or water expansion). The pressure setting of the buffer unit is targeted to ensure that the cooling water pressure at the main engine inlet fulfils the WinGD specification requirement.
- **Safety valve** (DN32) needs to be set at approximately 0.5 bar above the buffer unit set pressure.
- **Level Switch, High (LSH), and Level Switch, Low (LSL)**:
  - The LSL is set at approximately 35% of the total volume of the buffer unit. When the LSL is triggered, a signal to start is emitted simultaneously to the control air SOV and to the buffer unit supply pump.
  - The LSH is set at approximately 65% of the total volume of the buffer unit. When the LSH is triggered, a signal is emitted to stop the buffer unit supply pump.
  - The volume difference between the LSH and the LSL must not be less than 150 litres.
- Level Alarm, High (LAH), and Level Alarm, Low (LAL):
  - The LAH must be set at approximately 70% of the total volume of the buffer unit.
  - The LAL must be set at approximately 30% of the total volume of the buffer unit.

Buffer unit supply pump

The buffer unit supply pump compensates for losses in the CCW system. This pump is automatically controlled by the water level in the buffer unit. It is also advisable to monitor the running period of the supply pump. Monitoring of the pump running period can warn when the running period exceeds a pre-set value, indicating unusual water losses in the system. Spare parts for the supply pump must be available according to classification societies requirements.

Pump type	Centrifugal or positive displacement
Capacity	0.5 m^3/h
Delivery head	4 bar (can be adjusted depending on project-specific design)

4.2.3 Pre-heating

To prevent corrosive liner wear when not in service or during short stays in port, it is important to keep the main engine warm. Warming-through can be provided by a dedicated heater, using boiler raised steam or hot water from the diesel auxiliaries, or by direct circulation from the diesel auxiliaries.

Pre-heating from cooling water systems

If the requirement for warming-up is from the cooling water systems of the diesel auxiliaries, it is essential that the amount of heat available at normal load is sufficient to warm the main engine.

If the main and auxiliary engines have a cooling water system which can be cross-connected, it must be ensured that, when the cross-connection is made, any pressure drop across the main engine does not affect the cooling water pressure required by the auxiliaries.

If the cooling water systems are apart, then a dedicated heat exchanger is required to transfer the heat to the main CCW system.

Pre-heating by direct water circulation

Use of main Cylinder Cooling Water pump

If the main CCW pump is used to circulate water through the engine during pre-heating, the heater needs to be arranged parallel with the CCW system, and on/off control needs to be provided by a dedicated temperature sensor at the CCW outlet of the engine. The flow through the heater is set by throttling discs, but not by valves.

Use of separate pre-heating pump

If a separate pre-heating pump is required, a small unit with 10% of the main pump capacity and an additional non-return valve between CCW pump and heater need to be installed. In addition, the pumps need to be electrically interlocked to prevent two pumps running at the same time.

Recommended temperature

The recommended temperature to start and operate the engine is 60°C at CCW outlet. If the engine is started below the recommended temperature, engine power must not exceed 80% of CMCR until the water temperature reaches 60°C.

The ambient engine room temperature and warm-up time are key parameters to estimate the heater power capacity required to achieve the target temperature of 60°C. The shipyard or ship designer determines the ambient engine room temperature and the warm-up time (which can also be specified by the ship owner) on the basis of their own experience.

Warm-up time

The graph in Figure 4-7, 🗎 4-13 shows the warm-up time needed in relation to the ambient engine room temperature to arrive at the heat amount required per cylinder. The graph covers the warming-up of engine components per cylinder, taking also the radiation heat into account. The readable figure is then multiplied by the number of cylinders to show the heater capacity required for the engine.

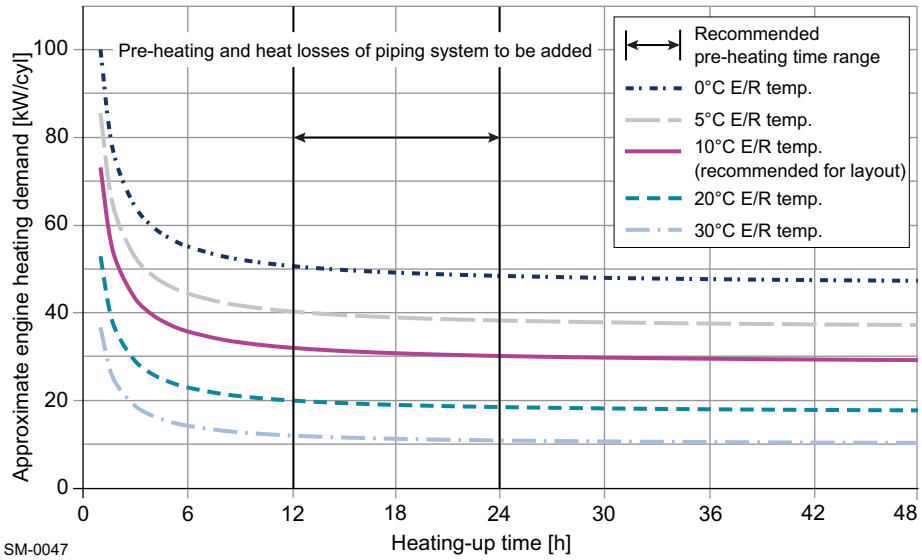

Figure 4-7 Pre-heating power requirement per cylinder

All figures are related to the engine requirements and must only be used for a first concept layout of the heater capacity. However, during pre-heater selection the shipyard or ship designer must also consider further aspects, such as heat losses in the external piping system, water volume inside the system, pipe lengths, volume of ancillary equipment, etc.

4.2.4 Freshwater generator

Using heat from the cylinder cooling system to distil seawater, a freshwater generator can be used to meet the demand for washing and potable water. The capacity of the freshwater generator is limited by the amount of heat available which depends on the engine service power rating.

NOTE	It is crucial in the design stage to ensure that there are sufficient safeguards to protect the main engine from thermal shock when the freshwater generator is started. To reduce the risk, it is recommended to use valves (e.g. butterfly valves), which are linked and actuated with a large reduction ratio, at the freshwater generator inlet and in the bypass line.

The latest version of the document "Concept Guidance" for freshwater generator installation ("DG 9721 Cooling Water Systems") is available on WinGD web page: *Freshwater generator installation*.

4.2.5 Cooling water treatment

Correct treatment of the LT and HT cooling water is essential for safe engine operation. According to the specifications in Table 4-2, 🗎 4-14, demineralised water or condensate must be used as raw water. In case of emergency, tap water can be used for a limited period, but afterwards the entire CCW system must be drained off, flushed and recharged with demineralised water.

Table 4-2 Recommended specifications for raw water

Parameter	Value
pH at 20°C	6.5 to 8.5
Max. dH	10° (corresponds to 180 mg/l $CaCO_3$)[a)]
Max. chloride	80 mg/l
Max. sulphates	150 mg/l

a) In case of higher values the water must be softened.

NOTE	Raw water from reverse osmosis technologies requires a minimum pH value of 6.0.

Corrosion inhibitors

Used water must be treated with a suitable corrosion inhibitor to prevent corrosive attack, sludge formation and scale deposits. For further information, please refer to chemical supply companies. Monitoring the level of the corrosion inhibitor and water softness is essential to prevent down-times due to component failures resulting from corrosion or impaired heat transfer.

NOTE	Internally galvanised steel pipes must not be used in connection with treated freshwater, because most corrosion inhibitors have a nitrite base. Nitrites attack zinc lining of galvanised piping and create sludge.

For further information on permissible cooling water additives, please refer to the document on WinGD web page: *Cooling water and additives*.

4.2.6 General recommendations for the cooling water system design

- The number of valves in the system must be kept to a minimum to reduce the risk of incorrect setting.
- Valves must be locked in the set position and labelled to eliminate incorrect handling.
- After the system commissioning is completed, it is prohibited to manually interfere with the cooling water flow in different branches of the main engine cooling water system by adjusting the valves or the orifice.
- Under normal operation of the CCW system, the pump delivery head and the total flow rate must remain constant, even when the freshwater generator is started up or shut down.
- The CCW system must be totally separated from steam systems. Under no circumstances must there be any possibility of steam entering the CCW system, e.g. via a freshwater generator.
- The installation of equipment affecting the controlled temperature of CCW must be examined carefully before being added. Uncontrolled increases or decreases in CCW temperature can lead to thermal shock of engine components and scuffing of pistons. Thermal shock must be avoided, and the temperature gradient of the cooling water when starting and shutting down additional equipment must not exceed 2°C/min at the engine inlet.
- The design pressure and temperature of all component parts, such as pipes, valves, expansion tank, fittings, etc., must meet classification societies requirements.

4.3 Lubricating Oil systems

The latest version of the MIDS "DG 9722 Lubricating Oil System" is available on WinGD web page: *MIDS*.

4.3.1 Lubricating Oil requirements

The validated Lubricating Oils (LOs) have been selected in co-operation with the oil suppliers. In their respective product lines the products are considered as appropriate lubricants for the indicated application.

WinGD does not accept any liability for the quality of the supplied LO or its performance in actual service.

For further information on the validated cylinder and system oils, please refer to the document on WinGD web page: *Lubricants*.

4.3.2 Main Lubricating Oil system

Field of application

Lubrication of the main bearings, thrust bearings and bottom-end bearings is carried out by the main LO system. The main LO system also operates the cooling of the piston crown with the efficient jet-shaker principle and the lubrication and cooling of the torsional and axial vibration dampers. Additionally the main LO is also used to drive different components (acting as servo oil), e.g. the exhaust gas valves and servo oil pumps. Figure 4-8, 🗎 4-16 shows the general installation principle.

Lubrication of crosshead bearings

The crosshead bearings are lubricated by an additional crosshead pump (see the specification in Booster pump for crosshead lubrication, 🗎 4-18).

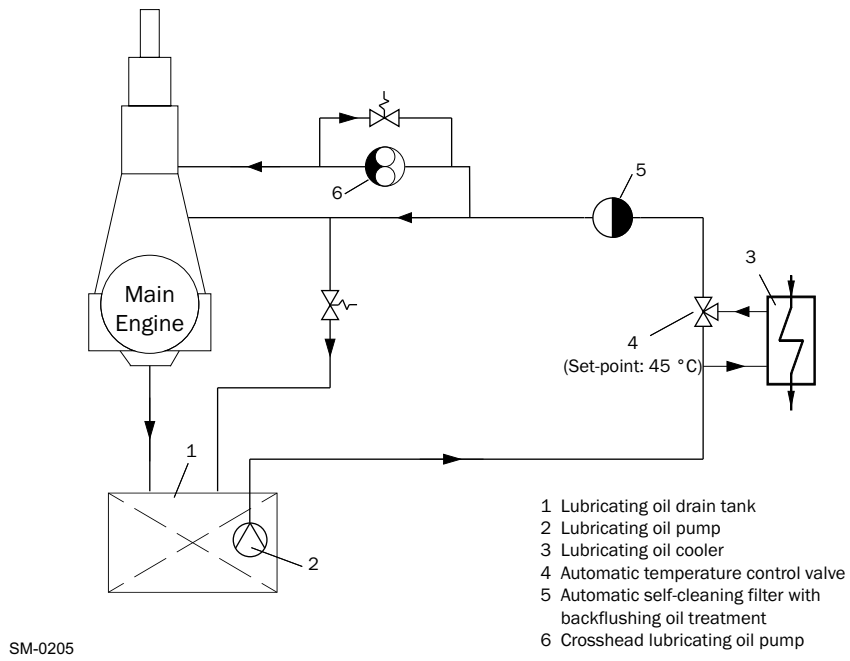

Figure 4-8 Lubricating Oil system

Main Lubricating Oil system components

Lubricating Oil pump

Positive displacement screw pumps with built-in safety valves, or centrifugal pumps (for pump capacities refer to *GTD*):

Type: Positive displacement screw pump	The flow rate must be within a tolerance of 0% to +10% of the GTD value, plus: • back-flushing flow of automatic self-cleaning filter, if such a filter is installed • oil flow to torsional vibration damper, if such a damper is installed.
Type: Centrifugal pump	The flow rate must be within a tolerance of -10% to +10% of the GTD value, plus: • back-flushing flow of automatic self-cleaning filter, if such a filter is installed • oil flow to torsional vibration damper, if such a damper is installed.
Delivery head	The final delivery head must be determined depending on the actual piping layout.
Working temperature	60°C
Oil type	SAE 30, 50 cSt at working temperature; when sizing the pump motor, the maximum allowed viscosity is 400 cSt

Lubricating Oil Cooler

Type	Plate or tubular
Cooling medium	Freshwater
Cooling water flow	Refer to *GTD*
Cooling water temperature	36°C
Heat dissipation	Refer to *GTD*
Margin for fouling	10%–15% must be added
Oil flow	Refer to *GTD*
Oil viscosity at cooler inlet	50 cSt at 60°C
Oil temperature at inlet	Approx. 60°C
Oil temperature at outlet	45°C
Working pressure oil side	6 bar
Working pressure water side	Approx. 3 bar

Full-flow filter

The drain from the filter must be sized and fitted to allow free flow into the LO drain tank. The output required for the main LO pump to 'back-flush' the filter without interrupting the flow must be taken into account when estimating the pump capacity (see Lubricating Oil pump, 🗎 4-17).

Type[a)]	Automatic back-flushing filter with differential pressure gauge and high-differential pressure alarm contacts. Designed to clean itself automatically using reverse flow or compressed air techniques. Back-flushing oil treatment by sludge checker.
Oil flow	Refer to *GTD*
Working viscosity	95 cSt, at working temperature
Working pressure	6 bar
Test pressure	Specified by classification society
Different pressure, clean filter	Max. 0.2 bar
Different pressure, dirty filter	Max. 0.6 bar
Different pressure, alarm	Max. 0.8 bar Note: Real operational settings could be less according to filter maker's recommendation.
Mesh size	Sphere passing max. 0.035 mm
Filter material	Stainless steel mesh
Filter inserts bursting pressure	Max. 3 bar differential across filter

a) Optional: change-over duplex filter designed for in-service cleaning, with differential pressure gauge and high-differential pressure alarm contacts

Booster pump for crosshead lubrication

Type	Positive displacement screw or gear types with built-in safety valves
Capacity	According to *GTD*: The flow rate must be within a tolerance of 0% to 10% of the GTD value.
Delivery head	Refer to *GTD*
Working temperature	Approx. 45°C
Oil type	SAE 30, 95 cSt at working temperature; when sizing the pump motor, the maximum allowed viscosity is 400 cSt.

System oil

The pistons of the engine feature highly efficient jet-shaker cooling. A validated system oil must be selected which fulfils the following basic properties:

- additive-type oil
- viscosity of SAE 30
- minimum Base Number (BN)[1] of 5.0 mg KOH/g
- minimum failure load stage of 11 ± 1 related to the FZG gear oil test method A/8.3/90 according to ISO 14635-1[2]
- detergency properties
- thermal stability
- anti-corrosion properties
- anti-foam properties
- demulsifying performance.

The consumption of system oil is given in Table 1-3, 🗎 1-4.

For further information on the validated system oils which can be used for this purpose, please refer to the respective document on WinGD web page: *Validated engine oils for WinGD engines*.

The system oil must be used according to the document "Lubricants" which is available on WinGD web page: *Lubricants.*

4.3.3 Flushing the Lubricating Oil system

For further information on flushing the LO system, please refer to the latest version of the MIDS "DG 9722 Lubricating Oil System" available on WinGD web page: *Instruction for flushing – Lubricating oil system*.

4.3.4 Actuation oil for methanol injection

To pressurise methanol to the correct injection pressure, the Methanol Booster Units (MBUs) are fed with pressurised system oil stored in a dedicated actuation oil rail. All the connections are engine internal and no additional connections are required from plant side.

4.3.5 Lubrication for turbochargers

As a standard, turbochargers are lubricated by the engine system oil.

An external lubrication system for turbochargers is available as an option, which can use a different LO according to the turbocharger maker's specifications. The external lubrication system requires an additional storage tank, a lubrication pump, a fine filter and an oil cooler. For further information, please refer to the latest version of the MIDS "DG 9722 Lubricating Oil System" available on WinGD web page: *MIDS*.

1) The Base Number (BN), measured in mg KOH/g (test method ASTM D2896), is a measure of the oil alkalinity. The BN of the cylinder oil is not an index for detergency or for other properties of the cylinder oil.
2) The FZG gear machines located at the FZG Institute, Munich/Germany are the reference test apparatuses and must be used in the event of any uncertainty about test repeatability and reproducibility.

4.3.6 Cylinder Lubricating Oil system

Cylinder lubrication is carried out by a separate system, working with the once-through principle. A hydraulically actuated dosage pump feeds cylinder LO to the surface of the cylinder liner through quills in the liner. The oil feed rate is adjustable and set based on the piston underside drain oil analysis results.

For further information on cylinder LO consumption, see Table 1-3, 🗎 1-4.

Cylinder Lubricating Oil

For normal operating conditions, it is recommended to use a high-alkaline marine cylinder LO with a viscosity of SAE 50 and a minimum kinematic viscosity of 18.5 cSt (mm^2/s) at 100°C. The alkalinity of the oil is indicated by its BN.

Base Number of cylinder Lubricating Oil

The BN of the cylinder LO must be selected depending on the total sulphur content of the fuel being burned.

Alternatives to a finished cylinder Lubricating Oil

The cylinder LO can also be blended/mixed on board. Multiple concepts for blending/mixing cylinder oil on board are available.

For further information on the validated cylinder LOs which can be used for this purpose, please refer to the respective document on WinGD web page: *Validated engine oils for WinGD engines*.

The cylinder oil must be used according to the document "Lubricants" available on WinGD web page: *Lubricants*.

Changeover between cylinder Lubricating Oils

There is an option to have two grades of cylinder LOs available. A changeover between the cylinder LOs can be initiated manually. In this case, two cylinder LO service tanks and a changeover device must be installed.

Cylinder Lubricating Oil supply

Cylinder LO can be supplied in one of the following ways:

- by gravity feed from the cylinder LO service tanks which must be placed at the required geodetic height (as suggested within the system proposal), to achieve the specified static pressure
- by active feed by a suitable pump sucking the cylinder LO directly out of the cylinder LO service tank which could be placed at any position. By selecting the pump option, redundancy in case of a pump failure, e.g. by installation of a second pump in parallel, must be considered.

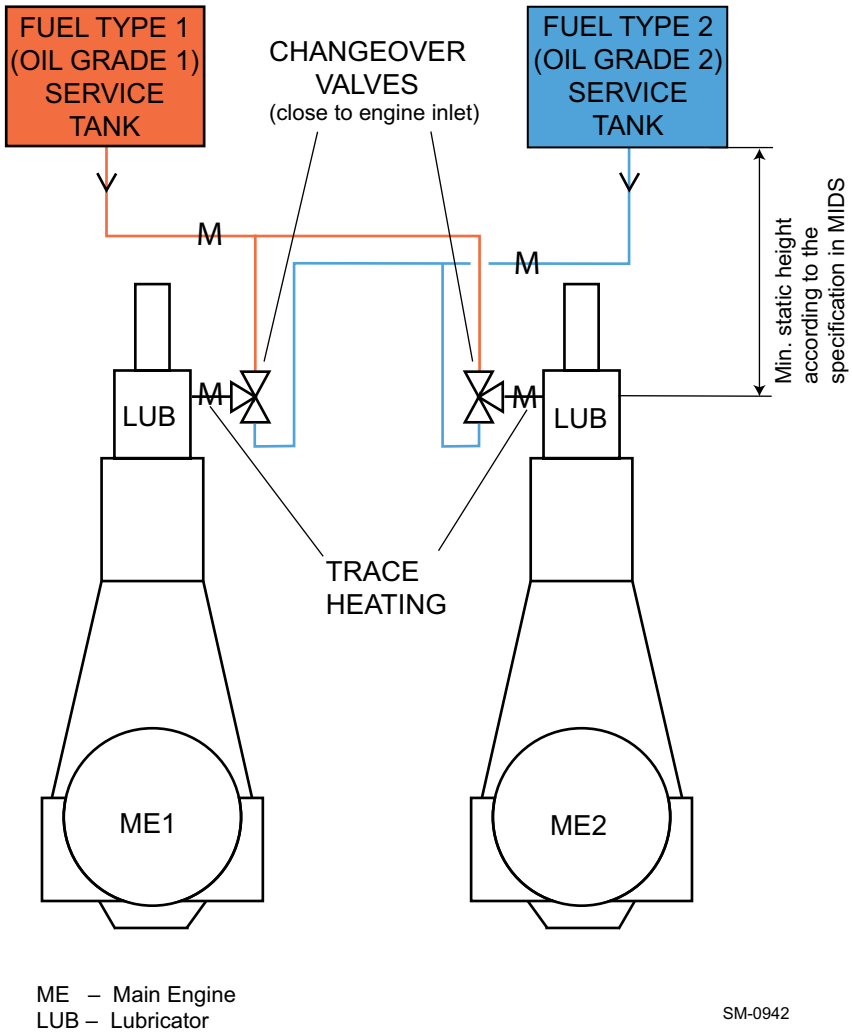

Figure 4-9 Dual cylinder Lubricating Oil grade installation, enabling independent fuel type operation of engine with a manual changeover valve

Single grade cylinder Lubricating Oil application

There is an option to have a single grade cylinder LO, if it is validated for all selected fuel types. In this case it is sufficient to install a single grade service tank and, thus, no changeover device is required.

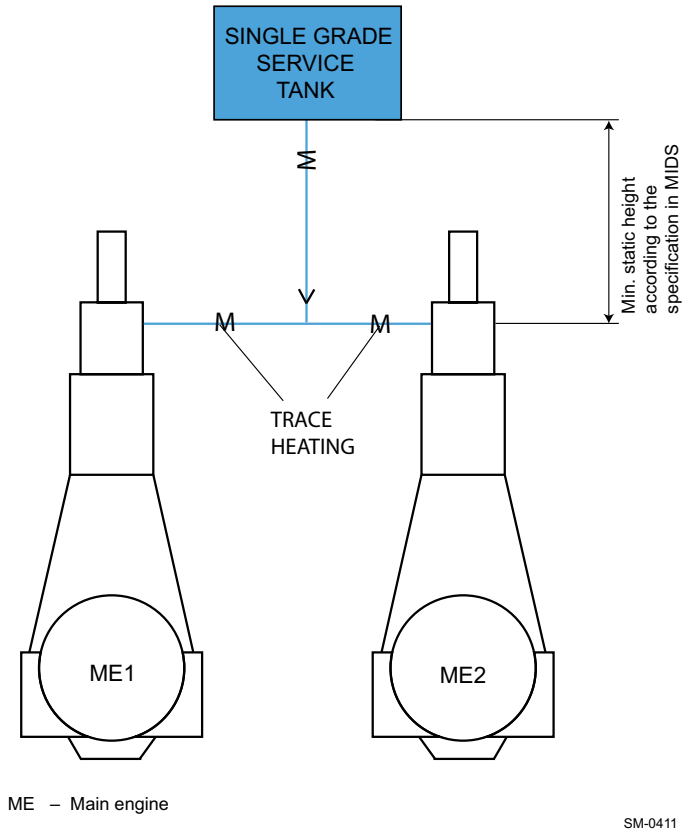

Figure 4-10 Single grade cylinder Lubricating Oil installation

Service tank and storage tank

The arrangement of the service tank and the storage tank can be changed by locating the storage tank in place of the service tank. If this arrangement is preferred, the storage tank must be placed at the same height as the service tank to provide the required static pressure at the engine inlet. Furthermore, the storage tank must be of similar design, with a sloping floor.

Electrical trace heating for ship side cylinder Lubricating Oil piping

To ensure the correct cylinder LO temperature at the engine inlet (40+10/-5°C), it is recommended to apply electrical trace heating. The heating cable together with the plug can be directly ordered from the engine maker. The guided heating cable length is determined by the cylinder LO pipe length and the engine type (see Table 4-3, 🗎 4-23).

NOTE	On the engine side, electrical trace heating is applied in the rail unit to keep the cylinder Lubricating Oil within the required temperature range, even during methanol operation in cold areas.

Cylinder Lubricating Oil trace heating cable

WinGD specifies the 10QTVR2-CT self-regulating heating cable for the ship side cylinder LO piping. Detailed technical information on this cable can be found in *MIDS*. To reach the required LO temperature of 40+10/-5°C, the proper length of heating cable must be selected for the engine and traced along the ship side piping spirally or in parallel, depending on the cable/pipe ratio (see Figure 4-11, 4-23).

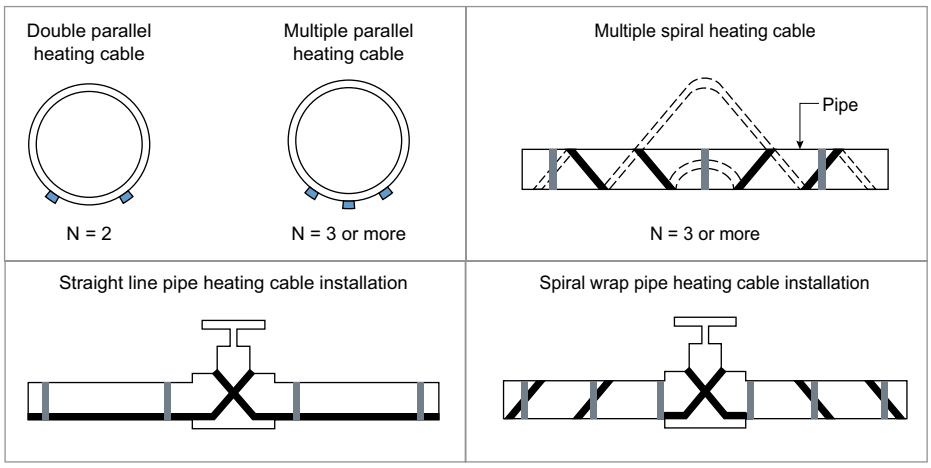

Figure 4-11 Trace heating cable arrangement

Considering the main engine power, LO feed rate and environment condition, WinGD specifies a minimum heating cable length 'Lc' as listed in the following table:

Table 4-3 Heating cable specification

No. of cyl.	Min. heating cable length 'Lc' [m]
5	13
6	15
7	18
8	20

Considering the ship side cylinder LO pipe length 'Lp', the heating cable must be longer than the lubricating oil pipe, i.e. 'Lc' > 'Lp'.

Insulation of trace heated cylinder Lubricating Oil pipe

To maintain the desired temperature, the ship side cylinder LO pipe must be well insulated. The following requirements must be considered:

- Insulation material, such as mineral wool, glass fibre or another material of class approved type, can be applied.
- WinGD recommends an insulation thickness of minimum 25 mm.

4.3.7 Maintenance and treatment of Lubricating Oil

It is essential that engine LO is kept as clean as possible. Water and solid contaminants held in suspension must be removed using centrifugal separators which operate in bypass to the engine lubricating system.

Alternatively to separators, filters from WinGD certified suppliers can be used.

Great care must be taken of separators and filters to ensure that they work correctly. The separators must be set up as purifiers. The bypass cleaning system with separators or filters from WinGD certified suppliers must be completely isolated from the fuel oil treatment systems; there must be no possibility of cross-contamination.

Lubricating Oil separator

Type	Self-cleaning centrifugal separator
Min. throughput capacity [l/h]	Refer to *GTD*
Rated separator capacity	The rated or nominal capacity of the separator must be according to the separator manufacturer's recommendations.
Separation temperature	90°C–95°C; refer to the manufacturer's instructions

Lubricating Oil samples

To ensure that representative samples of the LO can be taken, dedicated sampling points (cocks) are provided on the engine side. Such cocks need also to be installed on system side according to the relevant system proposal drawing in *MIDS*.

4.3.8 Drain tank

The engine is designed to operate with a dry sump: the oil returns from the bearings, flows to the bottom of the crankcase and through strainers into the LO drain tank. The drain connections from the crankcase to the drain tank are arranged vertically.

The drain tank must be located beneath the engine and equipped with the following:

- depth sounding pipe
- pipe connections for LO purifiers
- heating coil adjacent to pump suction
- air vents with flame protection.

NOTE	The classification societies require that all drain pipes from the crankcase to the drain tank are as low as possible below the free surface of the oil to prevent aeration and foaming; they have to remain below the oil surface at all times.

It is important to maintain adequate drainage under sea conditions resulting in pitching and rolling. The amount of LO required for an initial charge of the drain tank is shown in Figure 4-12, 🗎 4-25. The total tank size is normally 5%–10% greater than the amount of LO required for an initial filling.

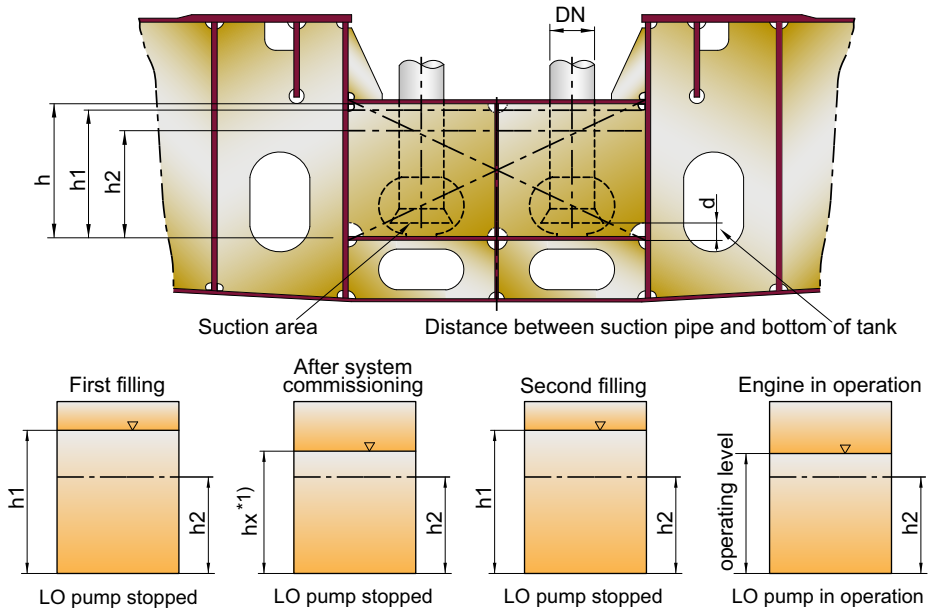

*1) Level after filling of external system.
Volume and level in the lub. oil drain tank depend on capacity of pipes, coolers, filters, etc.
The oil volume in tank contains part of the oil quantity which drains back when the pumps are stopped.

SM-0037

Figure 4-12 Dimensioning and filling process of Lubricating Oil drain tank

Arrangement of vertical Lubricating Oil drains

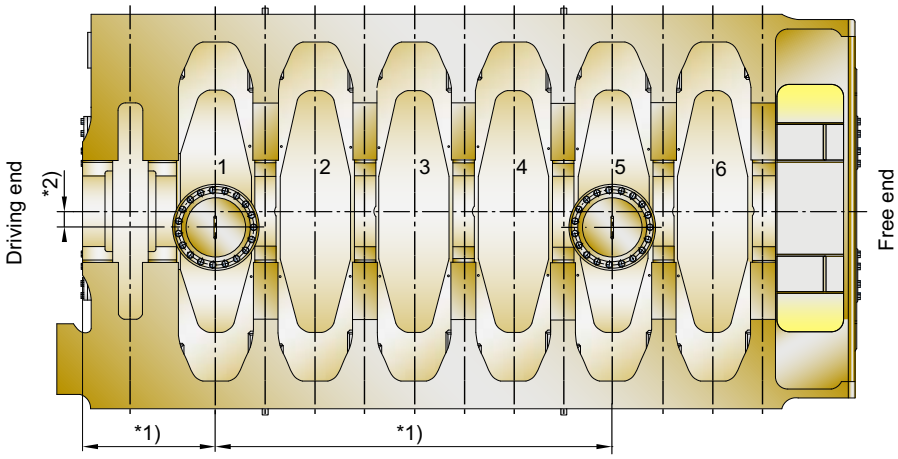

*1) Proposal to determine final position in accordance with shipyard
*2) Alternatively the oil drains may also be arranged symmetrically on port/fuel pump side.

SM-0038

Figure 4-13 Arrangement of vertical Lubricating Oil drains for 6-cylinder engines

NOTE	The illustration above does not necessarily represent the actual configuration or the stage of development or the type of the engine concerned. For all relevant and prevailing information, please refer to MIDS drawings.

Inclination angles

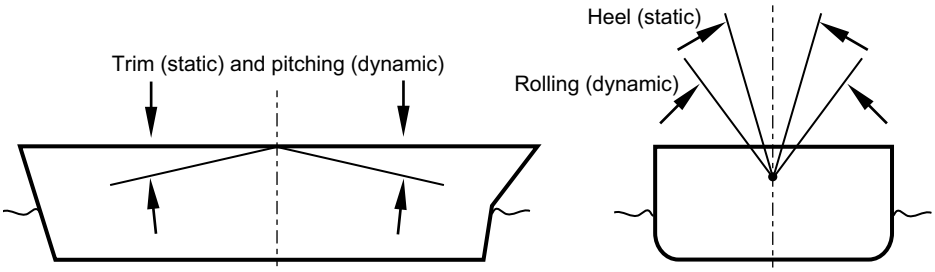

SM-0065 Athwartships and fore-and-aft inclinations may occur simultaneously.

Figure 4-14 Inclination angles

NOTE	The following tables represent the state of data as of 2023 and earlier. Please contact the relevant classification society for the latest data.

Table 4-4 Minimum inclination angles for full operability of the engine (1)

Classification societies (overview see Appendix, Table 9-1, 9-1)				
Year of latest update by Class	**ABS 2022**	**BV 2022**	**CCS 2022**	**CRS 2020**
Main and auxiliary engine				
Abbreviation	4/1/1/7.9	C/1/1/2.4	3/1/2/1.2.1	7/1/1.6/1.6.2
Heel to each side	15°	15°	15°	15°
Rolling to each side	22.5°	22.5°	22.5°	22.5°
Trim by the head a)	5°	5°	5°	5°
Trim by the stern a)	5°	5°	5°	5°
Pitching	±7.5°	±7.5°	±7.5°	±7.5°
Emergency sets				
Abbreviation	4/1/1/7.9	C/1/1/2.4	3/1/2/1.2.1	7/1/1.6/1.6.2
Heel to each side	22.5° c)	22.5°	22.5° c)	22.5° c)
Rolling to each side	22.5° c)	22.5°	22.5° c)	22.5° c)
Trim	10°	10°	10°	10°
Pitching	±10°	±10°	±10°	±10°
Electrical installation				
Abbreviation	4/1/1/7.9	C/1/1/2.4	4/1/2/1.2.1	7/1/1.6/1.6.2
Heel to each side	22.5° b)	22.5° b) c)	15° c)	22.5° b)
Rolling to each side	22.5° b)	22.5° b) c)	22.5° c)	22.5° b)
Trim	10°	10° b)	5°	10° b)
Pitching	±10°	±10° b)	±7.5°	±10° b)

a) Where the ship length exceeds 100 m, the fore-and-aft static angle of inclination can be taken as 500/L degrees (where L = length of ship in metres).

b) Up to an inclination angle of 45° switches and controls must remain in their last set position because no undesired switching operations or operational changes can occur.

c) For ships carrying liquefied gases or chemicals the arrangement must guarantee that the emergency power supply also remains operable with the ship flooded to a final athwartships inclination up to 30°.

Table 4-5 Minimum inclination angles for full operability of the engine (2)

Classification societies (overview see Appendix, Table 9-1, 🗎 9-1)			
Year of latest update by Class	**DNV 2022**	**IRS 2022**	**KR 2022**
Main and auxiliary engine			
Abbreviation	4/1/3/2.2/2.2.1	4/1/1/1.7/1.7.1	5/1/103./1.
Heel to each side	15°	15°	15°
Rolling to each side	22.5°	22.5°	22.5°
Trim by the head [a)]	5°	5°	5°
Trim by the stern [a)]	5°	5°	5°
Pitching	±7.5°	±7.5°	±7.5°
Emergency sets			
Abbreviation	4/1/3/2.2/2.2.1	4/1/1/1.7/1.7.1	5/1/103./1.
Heel to each side	22.5° [c)]	22.5° [c)]	22.5° [c)]
Rolling to each side	22.5° [c)]	22.5° [c)]	22.5° [c)]
Trim	10° [a)]	10°	10°
Pitching	±10°	±10°	±10°
Electrical installation			
Abbreviation	4/1/3/2.2/2.2.1	4/1/1/1.7/1.7.1	5/1/103./1.
Heel to each side	22.5° [b) c)]	22.5° [b) c)]	22.5° [b) c)]
Rolling to each side	22.5° [b) c)]	22.5° [b) c)]	22.5° [b) c)]
Trim	10° [a) b)]	10° [b)]	10° [b)]
Pitching	±10° [b)]	±10° [b)]	±10° [b)]

a) Where the ship length exceeds 100 m, the fore-and-aft static angle of inclination can be taken as 500/L degrees (where L = length of ship in metres).

b) Up to an inclination angle of 45° switches and controls must remain in their last set position because no undesired switching operations or operational changes can occur.

c) For ships carrying liquefied gases or chemicals the arrangement must guarantee that the emergency power supply also remains operable with the ship flooded to a final athwartships inclination up to 30°.

Table 4-6 Minimum inclination angles for full operability of the engine (3)

Classification societies (overview see Appendix, Table 9-1, 9-1)					
Year of latest update by Class	**LR 2021**	**NK 2021**	**PRS 2022**	**RINA 2022**	**RS 2022**
Main and auxiliary engine					
Abbreviation	5/1/3/3.7	D/1.3.1/6	VI/1/1.6.1	C/1/1/2.4	VII/2/2.3
Heel to each side	15°	15°	15°	15°	15°
Rolling to each side	22.5°	22.5°	22.5°	22.5°	22.5°
Trim by the head [a)]	5°	5°	5°	5°	5°
Trim by the stern [a)]	5°	5°	5°	5°	5°
Pitching	±7.5°	±7.5°	±7.5°	±7.5°	±7.5°
Emergency sets					
Abbreviation	5/1/3/3.7	D/1.3.1/6	VI/1/1.6.1	C/1/1/2.4	VII/2/2.3
Heel to each side	22.5° [c)]	22.5° [b) c)]	22.5° [c)]	22.5° [c)]	22.5° [c)]
Rolling to each side	22.5° [c)]	22.5° [b) c)]	22.5° [c)]	22.5° [c)]	22.5° [c)]
Trim	10°	10° [b)]	10°	10°	10°
Pitching	±10°	±10° [b)]	±10°	±10°	±10°
Electrical installation					
Abbreviation	6/2/1/1.10	H/1/1.1.7	VIII/2/2.1.2.2	C/2/2/1.6	XI/2/2.1.2.2
Heel to each side	15°	15° [c)]	15°	22.5° [b)]	15° [c)]
Rolling to each side	22.5°	22.5° [c)]	22.5°	22.5° [b)]	22.5° [c)]
Trim	5° [a)]	5° [a)]	5°	10° [b)]	5° [c)]
Pitching	±7.5°	±7.5°	±10°	±10° [b)]	±10° [c)]

a) Where the ship length exceeds 100 m, the fore-and-aft static angle of inclination can be taken as 500/L degrees (where L = length of ship in metres).

b) Up to an inclination angle of 45° switches and controls must remain in their last set position because no undesired switching operations or operational changes can occur.

c) For ships carrying liquefied gases or chemicals the arrangement must guarantee that the emergency power supply also remains operable with the ship flooded to a final athwartships inclination up to 30°.

4.4 Methanol fuel system

This section looks at the methanol fuel system of the X-DF-M engines.

For the information on methanol fuel system, please refer to the latest version of the MIDS "DG 9728 Methanol Fuel System" available on WinGD web page: *MIDS*.

The document "Flushing Instruction Fuel System" is available under the following link: *Flushing instruction – Fuel System*.

4.4.1 Safety considerations

The engine room arrangement (the design and location of the equipment) and the type of installed systems vary depending on the ship installation. However, the main principles of gas safety and redundancy must meet the minimum requirements as defined in the WinGD Safety Concept and in the relevant codes and regulations, including the IGF and IGC Codes.

The WinGD "Methanol Safety Concept" is available on WinGD web page: *2-Stroke Dual-Fuel Methanol Safety Concept*.

NOTE	Carefully read, understand and follow the instructions provided in the above-mentioned Safety Concept. This document is an important prerequisite for safe operation of the X-DF-M engine applications.

4.4.2 Operating principles

The WinGD X-DF-M engines are normally installed for dual-fuel operation, where the engine can operate in either methanol mode or diesel mode. The operating mode can be changed while the engine is running, within certain limits (see Figure 1-2, 🗎 1-6), without interruption of power generation. If the methanol fuel supply fails, the engine automatically trips to diesel mode.

Combustion control for each cylinder

One of the key measures is to control the combustion process separately in each cylinder to remain within the operating window and have optimal performance under all conditions for each cylinder regarding safety, efficiency and emissions. The X-DF-M engine facilitates individual cylinder combustion control, which makes it possible to obtain optimal operating performance at conditions where methanol quality, ambient temperature etc. can vary.

4.4.3 Methanol specifications

As a dual-fuel engine, the X-DF-M engine is designed for continuous service in methanol mode or in diesel mode. For continuous operation without reduction in rated output, the methanol, used as the main fuel in methanol mode, must fulfil at the engine inlet the requirements provided in Table 4-7, 🗎 4-30.

Table 4-7 Methanol specifications at the engine inlet

Property	Value
Methanol temperature range	25°C–50°C (35°C–50°C if no dry air is supplied for annular space ventilation)
Methanol feed pressure	13 bar
Permissible methanol pressure fluctuation	±0.5 bar (across all frequencies)

For further information on the bunkering specifications for methanol as a fuel for marine applications, please refer to the document "Fuels" on WinGD web page: *Fuels*.

4.4.4 Methanol fuel system arrangement

The methanol fuel system arrangement comprises the following:

- methanol bunkering station
- methanol storage and service tanks
- methanol Fuel Supply System (FSS)
- Fuel Valve Unit (FVU)
- methanol piping system
- venting system
- ventilation system
- purging water supply system
- inert gas supply system.

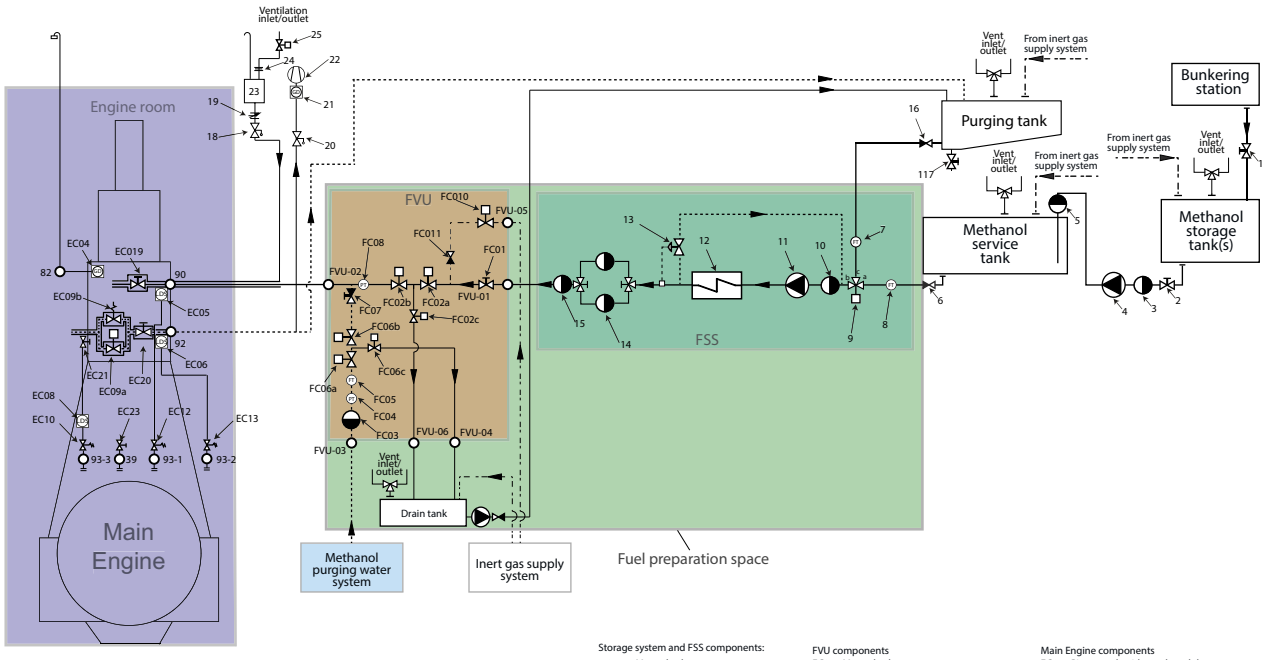

90 - Engine connection:
- Methanol fuel supply and purging inlet
- Ventilation intlet

92 - Engine connection:
- Methanol pressure release and purging outlet
- Ventilation outlet

93-1 - Engine connection:
- Outlet annular space drain (supply line)

93-2 - Engine connection:
- Outlet annular space drain (purging piping)

93-3 - Engine connection:
- Outlet annular space and inner pipe drain (engine side)

39 - Engine connection:
- Outlet contaminated oil collection tank drain

82 - Engine connection:
- Outlet piston underside methanol detection

FVU-01 - FVU connection:
- Inlet Methanol

FVU-02 - FVU connection:
- Outlet Methanol purging
- Ventilation outlet

FVU-03 - FVU connection:
- Inlet purging water

FVU-04 - FVU connection:
- Outlet Methanol purging

FVU-05 - FVU connection:
- Inlet inert gas

FVU-06 - FVU connection:
- Outlet inert gas or purging water

Storage system and FSS components:
1, 2, 17 - Manual valve
3, 5 - Strainer
4 - Methanol transfer pump
6, 16 - Non-return valve
7, 8 - Flow transmitter
9 - Dosing valve: methanol/purging tank
10- Strainer for pump protection
11 - Methanol supply pump
12 - Heat exchanger (heating and cooling)
13 - Pressure regulating valve
14 - Duplex filter (10 micron)
15 - Indicator filter (25 micron)

Annular space ventilation components:

18, 20 - Spill stop valve
19 - Adjustable orifice
21 - Methanol detector
22 - Extraction fan
23 - Vening box
24 - Orifice
25 - Remote control valve

FVU components
FC01 - Manual valve
FC02 (a) - Combined master fuel valve and double-block and bleeed valve
FC02 (b, c) - Double-block & bleed valves
FC03 - Filter (10 micron)
FC04 - Pressure transmitter
FC05 - Flow transmitter
FC06 (a,b,c) - Double-block and bleed valve (purging water supply)
FC07 - Manual non-return valve
FC10 - Remote control valve
FC11 - Non-return valve

Main Engine components
EC04 - Piston underside methanol detector
EC05, EC06 - Liquid Detector Sensor
EC09a - Remote control valve
EC09b - Safety valve
EC10, EC12, EC13 - Quick coupling valve
EC23 - Drain valve

SM-0994

Figure 4-15 Methanol storage and FSS

Alternative design for the methanol supply system without service tank is possible. The design of the methanol fuel system can vary, however, it must ensure that the methanol is delivered to the engine within a proper temperature and pressure range.

In general, the design of the methanol fuel system must be compliant with the international codes and classification society rules (see Compliance with international codes, 1-2).

4.4.5 Methanol bunkering station

Bunkering station

The methanol is transferred on board the vessel through a bunkering station. The recommended location for this station is on the open deck because there is sufficient natural ventilation. Additionally, it must be at a certain distance from air intakes, accommodation openings and machinery spaces. The bunkering lines must not be led through accommodations. In case of passage in enclosed spaces, a second barrier for the bunkering line must be considered (e.g. double-wall type or located in gas-tight ducts). The connections at the bunkering station must be of the dry-disconnect type. The bunkering lines must be arranged for inerting and gas freeing. For safety purposes, drip trays must be provided below the bunkering connections to collect and direct any spillage to a dedicated drain tank. Additionally, a water hose must be available for washing the deck if required.

For further information on the methanol bunkering station requirements, see the "DG 9728 Methanol Fuel System – Concept Guidance" available on WinGD web page: *Concept Guidance for X-DF-M*.

4.4.6 Methanol storage and service tanks

From the bunkering station, methanol is transferred to the methanol storage tank(s) and to the service tank(s) by means of transfer pumps.

Tank types

Different type of tanks can be used for methanol, such as independent, integral and portable tanks.

Independent tank

The independent tank are self-supporting, do not form part of the ship structure and an not essential to the hull strength.

Integral tank

The integral tank means a fuel-containment envelop tank which forms part of the ship structure and which can be stressed in the same manner and which stress the contiguous hull structure and which is normally essential to the structural completeness of the ship hull.

Portable tank

The portable tank is an independent tank which can be easily connected and disconnected from ship systems, and easily removed from the ship and installed on the board ship.

Independently from the selected type, the fuel tanks must be fitted with a tank-controlled venting system to ensure the tanks are gas freed and filled with fuel from a gas-safe condition. Each tank must be fitted with pressure and vacuum relief valves. All fuel tanks must be fitted with inerting connection, to be inerted all time during normal operation. A cofferdam around the fuel tanks must also be provided as an additional layer of gas and liquid tightness protection against external fire, toxicity and flammability.

For further information on the methanol storage and service tank requirements station requirements, see the "DG 9728 Methanol Fuel System – Concept Guidance" available on WinGD web page: *Concept Guidance for X-DF-M*.

4.4.7 Methanol Fuel Supply System

The goal of the methanol Fuel Supply System (FSS) is to provide the methanol fuel to the engine as required. It must be achieved during engine operation and bunkering.The methanol fuel must be delivered to the engine within a specific range of temperature, pressure and purity. It is achieved by means of supply pumps, heat exchanger and filters. A Fuel Valve Unit (FVU) must be installed for safety and control purposes.

Supply pump

Supply pump(s) must installed to deliver the methanol to the FSS. The pump(s) coupling must be of magnetic type. Standard motors and ball bearings can be used for the supply pump(s). It is recommended to equip the supply pump(s) with a standard Variable Frequency Drive (VFD) which allows to maintain the desired pressure following the engine power. Explosion protection type must be suitable for methanol application.

Type	According to methanol FSS supplier
Capacity	According to *GTD*: The capacity must be within a tolerance of 0% to +20% of the GTD value, plus back-flushing flow of automatic self-cleaning filter, if such a filter is installed.
Delivery pressure	The supply pump must ensure a pressure at the engine inlet of 13 bar. The system pressure drop must be considered.

Flow meter

A flow meter must be provided upstream the supply pump(s) to measure the methanol fuel consumption.

Heat exchanger

A heat exchanger with heating and cooling functionalities must be installed. This ensures that the methanol fuel is maintained within a proper temperature range. The heating and cooling medium for the heat exchanger can be a water-glycol mixture, circulating in a closed and pressurised loop.

Filter

A methanol filter must be provided. Duplex type filter is recommended. The absolute filtration grade of 10 mm (absolute sphere passing mesh size) must be selected. Stainless steel wire mesh is recommended. A differential pressure monitoring device is required. An additional 25 mm (absolute sphere passing mesh size) indicator filter downstream of the duplex filter is recommended.

4.4.8 Methanol Fuel Valve Unit

Before being supplied to the engine, the methanol fuel passes through the methanol Fuel Valve Unit (FVU). It is a module connected to the engine methanol fuel supply piping. The FVU comprises a series of fuel control valves before the consumers and represents the interface between the engine and the ancillary systems. The purposes of this unit are to isolate the engine from the methanol supply system as well as to connect the methanol purging water supply system. As a safety precaution, to ensure the tightness of valves and the proper functioning of components, a methanol leakage test is performed on the FVU before the engine starts operating on methanol fuel.

Fuel Valve Unit components

The main components of the FVU are:

- A master fuel engine valve consists of a manually operated stop valve and an automatically operated valve coupled in series. Alternatively, a combined manually and automatically operated valve installed on the main methanol supply line to the engine.
- Two shut-off valves, in series with a venting valve in between with a double-block-and-bleed function, are installed on the main methanol supply line to the engine.
- A manual shut-down valve is installed on the main methanol supply line to the engine for maintenance purposes. This must be installed upstream of the double block and bleed valve.

To enable independent operation of different fuel methanol consumers, it is recommended that each methanol fuel consumer's supply line is equipped with an independent fuel methanol shut-off valve.

Double-block and bleed valves, pressure transmitter, flow transmitter as well as a 10 mm (absolute sphere passing mesh size) filter are also required in the FVU for the purging water supply system.

NOTE	According to the international IGF, IGC codes (currently under review) as well as to the classification society rules, the master fuel engine valve must be located outside the machinery space in which methanol fuelled consumer is located and as close as possible to the methanol fuel preparation equipment.

4.4.9 Methanol piping system

Double-wall concept

According to the international codes, the fuel piping in gas-safe machinery spaces must be completely enclosed by a double pipe or duct. It is used to contain any leakage and eventually to lead the leaked content to suitable locations.

Annular space requirements

According to the IMO rules and the international codes, the annular space between the concentric pipes can be either pressurized, with inert gas or equipped with mechanical ventilation of under pressure type. In this case, the extraction capacity must be minimum 30 air changes per hour and maximum 45 air changes per hour. Alternative solutions that provide an equivalent safety level can also be accepted by the Administration. Currently, the X-DF-M engines are equipped with the annular space ventilation concept.

Material

When materials for inner and outer piping are selected, due consideration must be taken with respect to the corrosive nature of methanol. The engine methanol fuel piping system applies 316L quality. The corrosive nature of methanol must also be considered when the piping material for the external fuel supply system is selected.

For further information on the methanol fuel supply piping requirements, see "DG 9728 Methanol Fuel System – Concept Guidance" available on WinGD web page: *Concept Guidance for X-DF-M*.

4.4.10 Methanol fuel venting

For the X-DF-M engines, a fixed venting system must be arranged for all methanol storage and service tanks. This system is used to safely fill the tanks with methanol from a gas-free condition.

The main components of the venting system include the following:

- vents
- pressure relief valve(s), installed on the end of the vent pipe or fitted directly inside the vent line
- vacuum relief valve(s), installed on each methanol tank.

Venting of methanol fuel vapours

Methanol tank vent outlets must be located on open decks at a proper distance from deck, air intake, opening to accommodation, service spaces and ignition sources according to classification society rules. The venting system must be connected to the highest point of each tank. The vent lines must be self-draining under all normal operating conditions.

NOTE	The venting system must be designed exclusively for venting and gas freeing purposes. The methanol tank venting system and the fuel preparation space ventilation system must be kept separate. For further information, see section 4.4.13 Inert gas supply system, 🗎 4-37.

4.4.11 Ventilation systems for methanol application

Independent ventilation systems of mechanical under-pressure type must be installed in all the hazardous areas where methanol vapour can accumulate, e.g. fuel preparation room, enclosed and semi-enclosed bunkering station, ducts and double-walled pipes, as well as any other spaces identified in the risk assessment.

Ventilation of double-wall methanol fuel piping

All methanol fuel piping on the engine is of the double-wall type. When the mechanical ventilation of under-pressure type is applied to the annular space (see 4.4.9 Methanol piping system, 🗎 4-34), this space is ventilated by suction pressure, as created by a ventilation fan.

Location of ventilation air inlets

The ventilation inlet for the double-walled piping must always be located in a non-hazardous area away from ignition sources. The inlet opening must be fitted with a suitable wire mesh guard and protected from ingress of water.

Extraction fan capacity

The extraction fan capacity is calculated for an air flow rate that ensures air exchanges of minimum 30 times per hour and maximum 45 times per hour. The volume of extraction air depends on the volume of the annular space of the main engine.

According to classification societies requirements, spare parts must be available for each type of fan, except if a second fan is mounted as redundancy.

Dry air supply for annular space ventilation

If the methanol fuel temperature is below the dew point of the annular space ventilation air, then dry air needs to be supplied for the engine annular space ventilation to prevent condensation. This can be achieved by supplying compressed air (working air at 7–8 bar(g) is sufficient). The compressed air capacity must be designed in such a way that the volume of the annular space can be ventilated at minimum 30 times per hour and maximum 45 times per hour. Some design margin must be included for the layout uncertainties, as well as to account for air loss through the flow indicator as applied in the MIDS installation proposal.

Hazardous area

According to the IGC/IGF Code, a 1.5-metre hazardous area around both the ventilation air inlet and outlet must be taken into consideration when the ventilation piping is designed.

For further details about the methanol ventilation system requirements, see "DG 9728 Methanol Fuel System – Concept Guidance" available on WinGD web age: *Concept Guidance for X-DF-M*.

4.4.12 Methanol sequences of operation

Different sequences of operation are available for the X-DF-M engines. A functional description for each operational step is provided below.

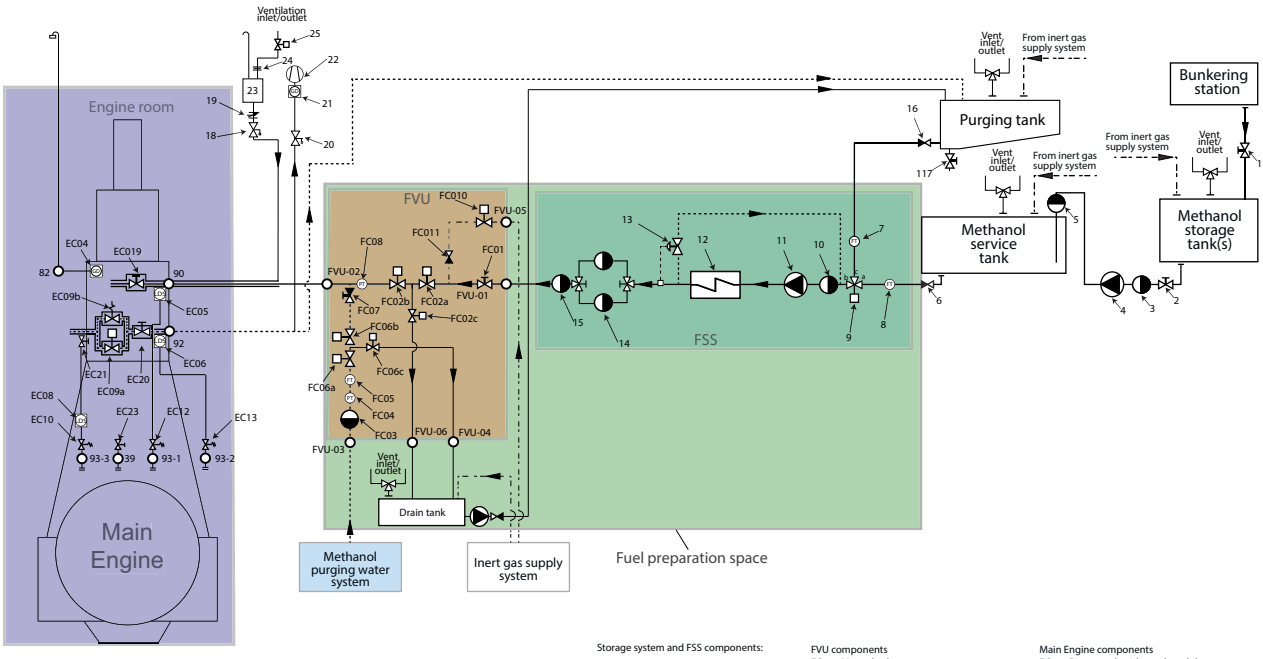

90 - Engine connection:
- Methanol fuel supply and purging inlet
- Ventilation intlet

92 - Engine connection:
- Methanol pressure release and purging outlet
- Ventilation outlet

93-1 - Engine connection:
- Outlet annular space drain (supply line)

93-2 - Engine connection:
- Outlet annular space drain (purging piping)

93-3 - Engine connection:
- Outlet annular space and inner pipe drain (engine side)

39 - Engine connection:
- Outlet contaminated oil collection tank drain

82 - Engine connection:
- Outlet piston underside methanol detection

FVU-01 - FVU connection:
- Inlet Methanol

FVU-02 - FVU connection:
- Outlet Methanol purging
- Ventilation outlet

FVU-03 - FVU connection:
- Inlet purging water

FVU-04 - FVU connection:
- Outlet Methanol purging

FVU-05 - FVU connection:
- Inlet inert gas

FVU-06 - FVU connection:
- Outlet inert gas or purging water

Storage system and FSS components:
1, 2, 17 - Manual valve
3, 5 - Strainer
4 - Methanol transfer pump
6, 16 - Non-return valve
7, 8 - Flow transmitter
9 - Dosing valve: methanol/purging tank
10- Strainer for pump protection
11 - Methanol supply pump
12 - Heat exchanger (heating and cooling)
13 - Pressure regulating valve
14 - Duplex filter (10 micron)
15 - Indicator filter (25 micron)

Annular space ventilation components:
18, 20 - Spill stop valve
19 - Adjustable orifice
21 - Methanol detector
22 - Extraction fan
23 - Vening box
24 - Orifice
25 - Remote control valve

FVU components
FC01 - Manual valve
FC02 (a) - Combined master fuel valve and double-block and bleeed valve
FC02 (b, c) - Double-block & bleed valves
FC03 - Filter (10 micron)
FC04 - Pressure transmitter
FC05 - Flow transmitter
FC06 (a,b,c) - Double-block and bleed valve (purging water supply)
FC07 - Manual non-return valve
FC10 - Remote control valve
FC11 - Non-return valve

Main Engine components
EC04 - Piston underside methanol detector
EC05, EC06 - Liquid Detector Sensor
EC09a - Remote control valve
EC09b - Safety valve
EC10, EC12, EC13 - Quick coupling valve
EC23 - Drain valve

SM-0994

Figure 4-16 Methanol storage and FSS

Operational function test

The operational function test is preformed before starting the methanol operation. For further information, see section 4.4.15 Methanol fuel leak test, 🗎 4-39.

Normal operation

During normal operation, the methanol is delivered from the service tank to the engine by means of a methanol supply pump. Excessive supply is recirculated to pump suction side. During normal operation, there is no recirculation of fuel to the purge tank. The methanol purging water supply system is in stand-by and no purging water is supplied to the system. During normal operation, the service tank, storage tank(s) as well as the purging tank are inerted all the time with inert gas (e.g. N_2).

Methanol stopping

If for any reason the methanol mode is stopped, the methanol supply to the engine is cut off. The methanol in the FSS recirculates to the methanol supply, either directly to the pumps suction inlet or to the service tank.

Methanol purging

Methanol purging is required for maintenance work, in case of failure of methanol injection system components as well as in case of depressurisation of methanol injection system.

For further information on failures initiating the methanol purging procedure, please refer to the Safety Concept: *2-Stroke Dual-Fuel methanol Safety Concept*.

When the methanol purging procedure is initiated, the methanol system is depressurised. The water is supplied to the engine by means of the purging water supply system. The methanol and water mixture is pushed to the purging tank. The purging procedure is completed when the required purging water flow has been introduced to the system and the methanol in the system is completely replaced by water.

Consumption of purging water mixture

In methanol mode in the range of 30% to 100% of the CMCR power, the content of the purging tank, with a flow of 5%, can be dosed into the methanol supply line. Alternative methods of purging tank content handling can be selected.

For further details on the methanol sequences of operation, please refer to the "DG 9728 X-DF-M Operation Concept" available on WinGD web page: *X-DF-M Operation Concept*.

4.4.13 Inert gas supply system

Methanol is classified as a low-flashpoint fuel (with a flashpoint of 11°C). Since ambient temperatures can be well above its flashpoint, methanol burns if exposed to an ignition source and air. To control methanol vapour in the methanol tanks, inert gas blanketing or padding is required at all the time. This inert gas is supplied by the inert gas supply system.

Inert gas is also required for purging the methanol supply system. The detailed design of the purging and inerting of the fuel supply system is in the scope of the fuel supply system supplier.

4.4.14 Purging water supply system

Purging and flushing of the methanol fuel system is performed in case of maintenance work, in case of failure of methanol injection system components as well as in case of depressurisation of methanol injection system during diesel mode.

For further information on failures initiating the methanol purging procedure, please refer to the Safety Concept: *2-Stroke Dual-Fuel methanol Safety Concept*.

The methanol fuel system must be depressurised and the remaining methanol must be removed by water. For this purpose, the FVU is equipped with a connection to the purging water supply system.

Purging water properties

For purging, WinGD requires water with the following properties:

Table 4-8 Purging water requirements

Property	Value
Conductivity (µS/cm at 20°C)	≤20
Clarity	Clean & Bright
Colour	None
Odour	None
Sediment	None

Purging water pressure

A purging water pressure (p_i) of 5 bar is sufficient to purge the methanol to the purging tank.

Purging water consumption volume

The purging water consumption for one purging cycle must be at minimum twotimes the total volume of the space to be purged. This volume is the sum of main engine internal methanol piping as well as the external methanol piping (supply and return) including the relevant fittings. Purging water volume can be calculated with the following equation:

$$V_i = 2 \cdot V_a = 2 \cdot (V_{engine} + V_{system})$$

Formula 4-1

where:

V_i ..... = minimum required purging water volume [m^3]

V_a ..... = total volume of the space to be purged [m^3]

V_{engine} ..... = volume of main engine internal methanol piping to be purged [m^3]

V_{system} ..... = volume of the external methanol piping (supply and return) including the relevant fittings to be purged [m^3]

Further information on the main engine internal piping volume, which must be purged, can be found in the 'Methanol Fuel System' of the *MIDS*. The volume of the methanol fuel piping on the ship side must be calculated by the shipyard and must be based on the piping layout.

Purging tank dimensioning

The purging tank must be designed for at least five purging sequences and can be calculated with the following equation:

$$V_p = u \cdot n \cdot V_i$$

Formula 4-2

where:

V_p..... = minimum required purging tank volume [m^3]
u ..... = margin for the ullage and minimum filling level (e.g. 1.2)
n ..... = number of purging sequences to be stored (e.g. 5)
V_i ..... = minimum required purging water volume [m^3]

For further details on the methanol purging procedure, please refer to the "DG 9728 X-DF-M Operation Concept" available on WinGD web page: *X-DF-M Operation Concept*.

Purging pump capacity

The purging pump capacity can be calculated with the following equation:

$$Q_p = V_i / t_p$$

Formula 4-3

where:

Q_p..... = purging pump capacity [m^3/h]
t_p..... = purging timing [h]

A purging timing of 10 min is the value recommended by WinGD.

Purging pump delivery head

The purging pump must be able to provide the design flow rate under consideration of the system flow resistance and the project specific static height between the engine outlet and the purging tank inlet. In case the exact layout is not known, 5 bar[g] minimum pressure can be selected.

4.4.15 Methanol fuel leak test

Three different type of tests are performed on the methanol fuel system:

- factory leakage test
- leakage test for commissioning and after maintenance
- operational function test.

Factory leakage test

The commissioning leakage test is performed during commissioning. This test is executed with a testing pump with water at 1.5 times the design pressure.

Leakage test for commissioning and after maintenance

The leakage test after maintenance is performed after components replacement. This test is executed with a testing pump with water at the design pressure.

Operational function test

The operational function test is preformed on the inner pipe for checking the components functionality before starting the methanol operation. This operational function test is performed with water at the operational pressure of 5 bar from the purging water supply system and it is an automatic function embedded in the ECS.

For further details on the methanol fuel leak test, please refer to the "DG 9728 X-DF-M Operation Concept" available on WinGD web page: *X-DF-M Operation Concept*.

4.4.16 Maintenance work

When maintenance work on the engine is required, it is crucial to ensure that all methanol pipes are made gas-free and depressurised. This mitigates the risks associated with residual methanol as well as the risks of a pressurised system. To remove remaining methanol, a purging procedure for maintenance work is executed. This involves the usage of water, as well as inert gas, such as nitrogen, to effectively evacuate remaining methanol from the engine internal pipes including the interface to the FVU.

For further details on the methanol maintenance work, please refer to the "DG 9728 X-DF-M Operation Concept" available on WinGD web page: *X-DF-M Operation Concept*.

4.5 Fuel oil system

The fuel oil system is used to deliver the fuel oil to the engine during diesel mode. In the X-DF-M engines the main fuel supply system is also used to pilot the methanol during methanol mode.

The latest version of the MIDS "DG 9723 Fuel Oil System" is available on WinGD web page: *MIDS*.

Figure 4-17, 🗎 4-41 shows the installation principle for maximum fuel flexibility.

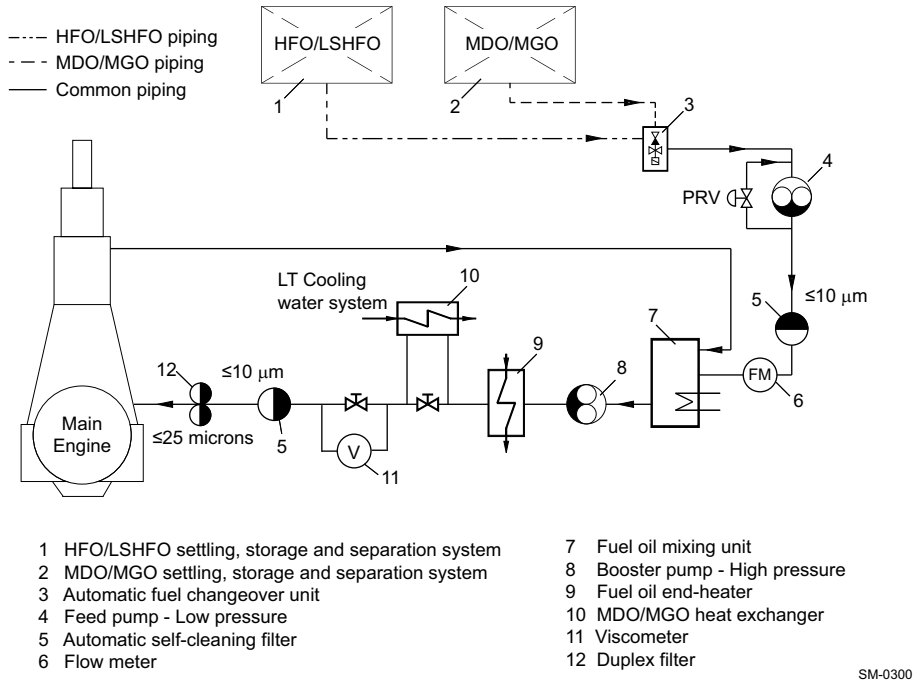

Figure 4-17 Fuel oil system

Further information on MDO/MGO fuels is provided in the document "Fuels". It considers additional design options for the fuel oil system, as well as optional heat exchangers for better viscosity regulation when changing between HFO/LSHFO and MDO/MGO. The document is available on WinGD web page: *Fuels*.

Fuel consumption

Data of fuel consumption can be taken from the project-specific *GTD* data sheet.

4.5.1 Fuel oil system components

The following components are associated with a fuel oil system of maximum fuel flexibility, i.e. operation on heavy fuel oils and distillates, as shown in Figure 4-17, 🗎 4-41. Thus, the following section considers a fuel oil viscosity of 700 cSt at 50°C.

In cases where only distillate fuels are considered, the system can be simplified (as explained in section 4.5.2 Fuel oil system with only MDO/MGO or MGO, 🗎 4-53), however, the reduction in fuel oil viscosity must be considered.

Feed pump: Low-Pressure fuel oil

Type	Positive displacement screw pump with built-in safety valve
Capacity	According to *GTD*: The capacity must be within a tolerance of 0% to +20% of the GTD value, plus back-flushing flow of automatic self-cleaning filter, if such filter is installed.
Delivery pressure	The feed pump must provide a required pressure in the downstream mixing unit to prevent water in the system from vaporising into steam. The pump, whilst considering system pressure drop, must provide a minimum of 1 bar above the water vapour pressure and always be above a 3 bar value. The water vapour pressure is a result of the system temperature and pressure for a given fuel type. Heavier oils need more heat and higher temperatures to maintain them at the correct viscosity compared to lighter oils. Refer to the formula and example below.
Electric motor	The electric motor driving the fuel oil feed pump must be sized for maximum pressure head (difference between inlet and outlet pressure), maximum fuel oil viscosity (100 cSt) and maximum required flow.
Working temperature	Below 100°C
Fuel oil viscosity	Depending on heat control of the fuel oil system, viscosity at working temperature will often differ. It will not be more than 100 cSt, however, can be considerably less (as low as 2 cSt with lower viscosity fuel like MDO/MGO or possibly LSHFO, see viscosity-temperature diagram – Figure 4-24, 🗎 4-57). The manufacturer's specification must comply with the fuel viscosity range. For further information on system options with additional temperature regulation, please refer to *Fuels*.

Formula for delivery gauge pressure

$p_v + 1 + Dp_1 + Dp_2$ [bar]

where:

p_v ..... = water vapour gauge pressure at the required system temperature [bar] (see viscosity-temperature diagram in section 4.5.7 Fuel oil viscosity-temperature dependency, 🗎 4-57)

Dp_1 ..... = max. pressure losses between feed pumps and mixing unit [bar]

Dp_2 ..... = max. pressure change difference across the pressure regulating valve of the feed system between min. and max. flow (see Pressure regulating valve, 🗎 4-43)

Example

HFO of 700 cSt at 50°C, required system temperature 145°C:

p_v ..... = 3.2 bar

Dp_1 ..... = 0.5 bar

Dp_2 ..... = 0.6 bar

Delivery gauge pressure = 3.2 + 1 + 0.5 + 0.6 = **5.3 bar**

Pressure regulating valve

The pressure regulating valve returns the excess fuel oil that is not required by the main engine, recirculating more when the engine is at lower power. To avoid heating-up of the fuel by recirculation, the return pipe is designed with cooling ribs.

It also works to ensure that the pressure downstream of the low-pressure feed pump remains 1 bar above the evaporation pressure of the water and there prevents entrained water within the fuel oil system from flashing off into steam.

The pressure regulating valve must have a flat steady-state characteristic across the fuel oil recirculation flow range.

Type	Self-operated or pilot-operated, with a manual emergency control. Either direct hydraulically or pneumatically actuated. However, when using a pneumatically actuated valve, use a combined spring type to close the valve in case of air supply failure.
Maximum capacity	According to *GTD*: Refer to feed pump capacity
Minimum capacity	Approx. 20% of that of the fuel oil feed pump
Service pressure	Max. 10 bar
Pressure setting range	2–6 bar
Inlet pressure change	The inlet pressure can vary by up to 0.8 bar depending on the flow in the range of 20% to 100%.
Working temperature	Below 100°C
Fuel oil viscosity	Depending on heat control of the fuel oil system, viscosity at working temperature will often differ. It will not be more than 100 cSt, however, can be considerably less (as low as 2 cSt with lower viscosity fuel like MDO/MGO or possibly LSHFO, see viscosity-temperature diagram – Figure 4-24, 🗎 4-57). The manufacturer's specification must comply with the fuel viscosity range. For further information on system options with additional temperature regulation, please refer to *Fuels*.

Mixing unit

The mixing unit equalises the temperature between the hotter fuel oil returning from the engine and the colder fuel oil from the service tank. The temperature difference between these sources is particularly high when changing over from HFO to MDO/MGO and vice versa.

Due to the small amount of fuel consumed, especially in part-load operation, only a small mixing unit is required. It is recommended that the tank contains not more than approximately 100 litres. It is important to avoid the changeover from HFO to MDO/MGO or vice versa taking too long.

For further information on changing over between heavy fuel oil and marine diesel oil (MDO/MGO) and vice versa, as well as for operation on distillate fuel, please refer to the document “Fuels” available on WinGD web page: *Fuels*.

Type	Cylindrical steel fabricated pressure vessel as shown in Figure 4-18, 🗎 4-44
Capacity	Refer to *GTD*
Dimensions	Refer to *MIDS*
Service pressure	10 bar
Test pressure	According to classification society
Working temperature	Up to 150°C

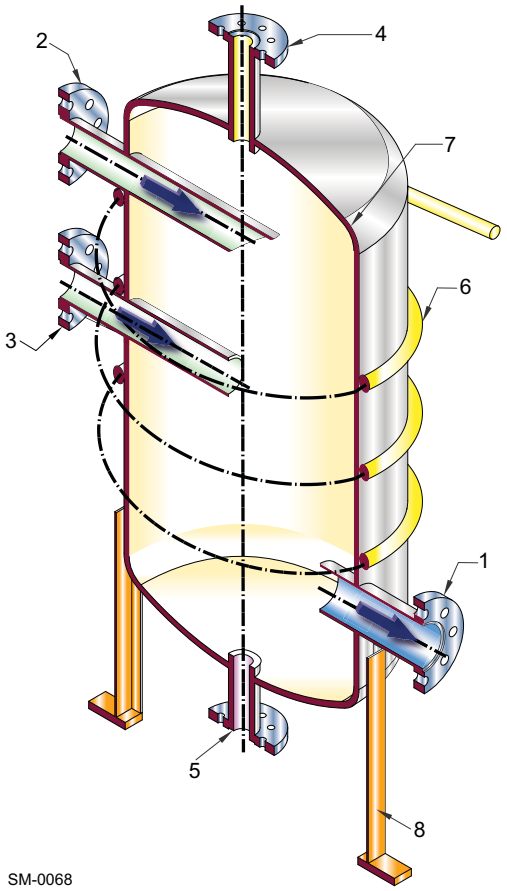

1 Outlet
2 Inlet, return pipe
3 Inlet from feed pump
4 Vent
5 Drain
6 Heating coil
7 Insulation
8 Mounting brackets

Figure 4-18 Mixing unit

Booster pump: High-Pressure fuel oil

The fuel oil booster pump delivers the fuel to the engine via a fuel oil end-heater for HFO operation.

Type	Positive displacement screw pump with built-in safety valve
Capacity	According to *GTD*: The flow rate must be within a tolerance of 0% to +20% of the GTD value, plus back-flushing flow of automatic self-cleaning filter, if such filter is installed.
Inlet pressure	Up to 6 bar
Delivery head	Final delivery pressure according to actual piping layout. Refer to *GTD*.
Electric motor	The electric motor driving the HP booster pump must be sized large enough for the power absorbed by the pump at maximum pressure head (difference between inlet and outlet pressure), maximum fuel oil viscosity (70 cSt) and the required flow.
Working temperature	Up to 150°C

End-heater

Operation is regulated with either the temperature or the viscosity (default mode) of the fuel oil. The viscosity is measured by the viscometer.

Type	Tubular or plate type heat exchanger, suitable for heavy oils up to 700 cSt at 50°C (or as project defines)
Heating source	Steam, electricity or thermal oil
Consumption of saturated steam	At 7 bar gauge pressure [kg/h]: $1.32 \cdot 10^{-6} \cdot CMCR \cdot BSFC \cdot (T_1 - T_2)$ where: *BSFC* = Brake Specific Fuel Consumption at Contracted Maximum Continuous Rating (*CMCR*) T_1 = temperature of fuel oil at viscometer [a)] T_2 = temperature of fuel oil from service tank
Heating capacity [kW]	$0.75 \cdot 10^{-6} \cdot CMCR \cdot BSFC \cdot (T_1 - T_2)$
Working pressure	Max. 12 bar, pulsating on fuel oil side
Working temperature	Up to 150°C, outlet temperature on fuel oil side

a) The viscosity is maintained by regulating the fuel temperature after the end-heater.

Viscometer

The viscometer regulates the fuel oil end-heater, enabling the fuel oil viscosity to be kept at preferable engine conditions. For HFO/LSHFO the ideal range is from 13 cSt to 17 cSt. The range between 10–20 cSt is acceptable. Although there is no active cooling required to keep the minimum limit of 10 cSt, the absolute minimum viscosity is 2 cSt. When low-viscosity fuels are used, the end-heater must not be active, and the MDO/MGO heat exchangers are required to maintain these limits.

MDO/MGO heat exchanger

For MDO/MGO operation, the fuel might need to be cooled to stay above a minimum viscosity of 2 cSt at engine inlet. This fuel oil heat exchanger (and any optional heat exchanger that is included, as shown in *Fuels*) uses LT cooling water.

A chiller unit (cooling from refrigeration) is not required if the fuel properties are in line with the latest ISO 8217:2017 specification. Such a unit is only needed for off-spec fuels that are not supported by WinGD.

Type	Tubular or plate type heat exchanger, suitable for diesel oils
Cooling medium	LT cooling water Alternatively: glycol-water mixture delivered from chiller unit
Cooling capacity [kW]	$Q = \frac{0.34 \cdot BSFC \cdot P \cdot (T_1 - T_2 + 25.65)}{10^6}$ where: Q [kW] = cooler heat dissipation at 100% engine load $BSFC$ [g/kWh] = specific fuel consumption at design conditions and 100% engine load P [kW] = engine power at 100% CMCR T_1 [°C] = temperature of distillate fuel supplied to engine T_2 [°C] = temperature of distillate fuel required at engine inlet
Working pressure	Max. 12 bar, pulsating on fuel oil side

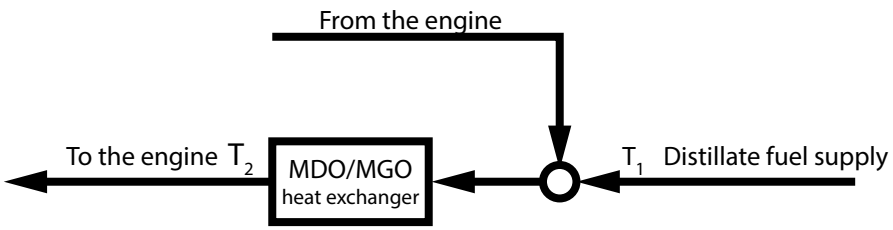

SM-0187

Figure 4-19 MDO/MGO heat exchanger

Fuel oil filters: Arrangement 'A'

Filtration grading

The grade of filter mesh is relative to the size of particles it captures, however, there are different ratings for filtration efficiencies and the rating parameters vary among manufacturers.

For simplicity, it is assumed that particles are spherical, thus, the size is defined by an equivalent diameter. A filter grading size is associated with this equivalent diameter but can vary depending on whether an absolute or nominal grading system is used.

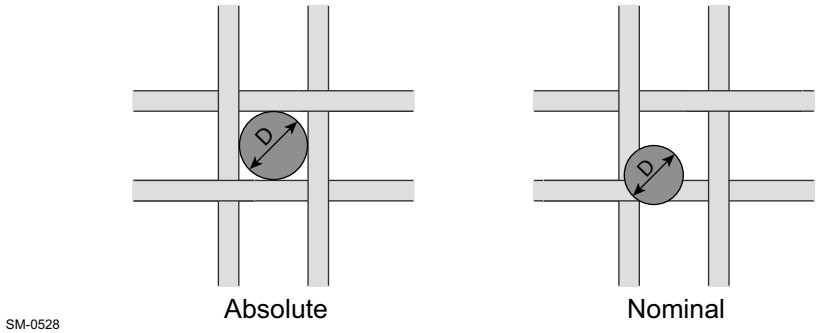

Figure 4-20 Mesh size difference between absolute and nominal

Absolute filtration grade

This value indicates the largest equivalent diameter capable of passing through the filter. This value equals the size of the mesh coarseness and, thus, can be referred to as the absolute sphere passing mesh size. Approximately all particles larger than the specified size are trapped on or within the filter.

Nominal filtration grade

This value is typically smaller than the absolute value and refers to an equivalent diameter where most particles are trapped. Generally, this is interpreted as a 85% to 90% filtration for particles larger than the nominal value but this can range (from 60% to 90% approximately). As this variation can cause complications, the nominal grade for filtration is not used in this document.

NOTE	WinGD provides all filter mesh sizes in absolute (abs.) values.

Arrangement 'A' of fuel oil filters (see Figure 4-21, 🗎 4-48) comprises:

- automatic self-cleaning filter of maximum 10 µm abs., installed either in the 'cold' feed system (see Option 1: Filter installation in feed system, 🗎 4-49) or in the 'hot' booster system close to engine inlet (see Option 2: Filter installation in booster circuit, 🗎 4-50)
- duplex filter of recommended maximum 25 µm abs., installed downstream of the engine inlet booster system (see Duplex filter, 🗎 4-51).

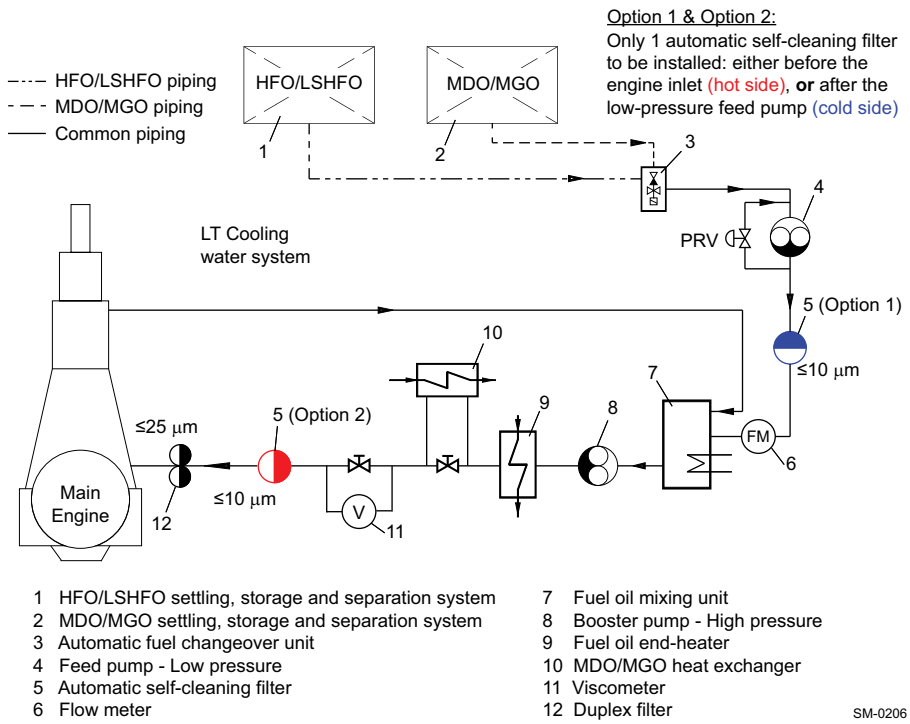

Figure 4-21 Fuel oil filter arrangement 'A'

The automatic self-cleaning filter of maximum 10 µm abs. is used to protect the engine against serious damage. It captures the catalytic fines which were not removed by the fuel oil separator. In addition, the filter provides a good indication of the separator efficiency.

NOTE	The self-cleaning performance must be suitable for the required filter fineness.

The 10 μm abs. filter can be installed in two different locations:

Option 1: Filter installation in feed system

In this position the maximum 10 μm abs. filter can be designed for a lower flow rate compared to the installation in the booster system. However, higher resistance due to higher fuel viscosity needs to be considered.

Advantage and disadvantage of this filter position:

Advantage	Booster pump is protected against abrasive catfines
Disadvantage	Engine is not optimally protected against booster pump wear particles

Table 4-9 Specification of automatic self-cleaning filter in feed system

Working viscosity	100 cSt, for HFO of 700 cSt at 50°C
Flow rate	According to *GTD*. The capacities cover the needs of the engine only. The feed pump capacity must be increased by the quantity needed for back-flushing of the filter.
Service pressure after feed pumps	10 bar at filter inlet
Test pressure	Specified by classification society
Permitted differential pressure at 100 cSt	• clean filter: max. 0.2 bar • dirty filter: max. 0.6 bar • alarm setting: max. 0.8 bar Note: Real operational settings can be less according to filter maker's recommendation.
Minimum bursting pressure of filter insert	Max. 3 bar differential across filter
Mesh size	Max. 10 μm abs.
Mesh size bypass filter	Max. 25 μm abs.
Filter insert material	Stainless steel mesh (CrNiMo)

Option 2: Filter installation in booster circuit

The maximum 10 μm abs. filter is installed in the booster circuit close to engine inlet. The filter needs to be laid out for a maximum working temperature of 150°C.

Advantage and disadvantage of this filter position:

Advantage	Optimum engine protection from fuel oil catfines and other abrasive particles from system wear
Disadvantage	Booster pump is not ideally protected against catfines

Table 4-10 Specification of automatic self-cleaning filter in booster system

Working viscosity	10–20 cSt required for HFO (13–17 cSt recommended)
Flow rate	According to *GTD*. The capacities cover the needs of the engine only. If a filter of automatic back-flushing type is installed, the feed and booster pump capacities must be increased by the quantity needed for back-flushing of the filter.
Service pressure	Max. 12 bar at filter inlet
Test pressure	Specified by classification society
Permitted differential pressure at 17 cSt and 20 cSt	• clean filter: max. 0.2 bar • dirty filter: max. 0.6 bar • alarm setting: max. 0.8 bar Note: Real operational settings can be less according to filter maker's recommendation.
Minimum bursting pressure of filter insert	Max. 3 bar differential across filter
Mesh size	Max. 10 μm abs.
Mesh size bypass filter	Max. 25 μm abs.
Filter insert material	Stainless steel mesh (CrNiMo)
Working temperature	Up to 150°C

Duplex filter

The second filter in Arrangement 'A' is a duplex filter of recommended maximum 25 µm abs. A coarser filter is also acceptable. The duplex filter is of manual cleaning type and is installed in the booster system close to engine inlet. This filter type is sufficient as most particles are already removed by the 10 µm filter, as outlined in Option 1: Filter installation in feed system, 🗎 4-49 and Option 2: Filter installation in booster circuit, 🗎 4-50.

Table 4-11 Specification of duplex filter in booster system

Working viscosity	10–20 cSt required for HFO (13–17 cSt recommended)
Flow rate	According to *GTD*. The capacities cover the needs of the engine only. If a filter of automatic back-flushing type is installed, the feed and booster pump capacities must be increased by the quantity needed for back-flushing of the filter.
Service pressure	Max. 12 bar at filter inlet
Test pressure	Specified by classification society
Permitted differential pressure at 17 cSt and 20 cSt	• clean filter: max. 0.2 bar • dirty filter: max. 0.6 bar • alarm setting: max. 0.8 bar Note: Real operational settings can be less according to filter maker's recommendation.
Minimum bursting pressure of filter insert	Max. 3 bar differential across filter
Mesh size	Max. 25 µm abs.
Filter insert material	Stainless steel mesh (CrNiMo)
Working temperature	Up to 150°C

Fuel oil filter: Arrangement 'B'

A maximum 10 µm abs. filter of automatic self-cleaning type is installed in the 'hot' booster system close to engine inlet. The filter needs to be laid out for a maximum working temperature of 150°C.

NOTE	The self-cleaning performance must be suitable for the required filter fineness.

Same filter specification as shown in Table 4-10, 🗎 4-50 is applied.

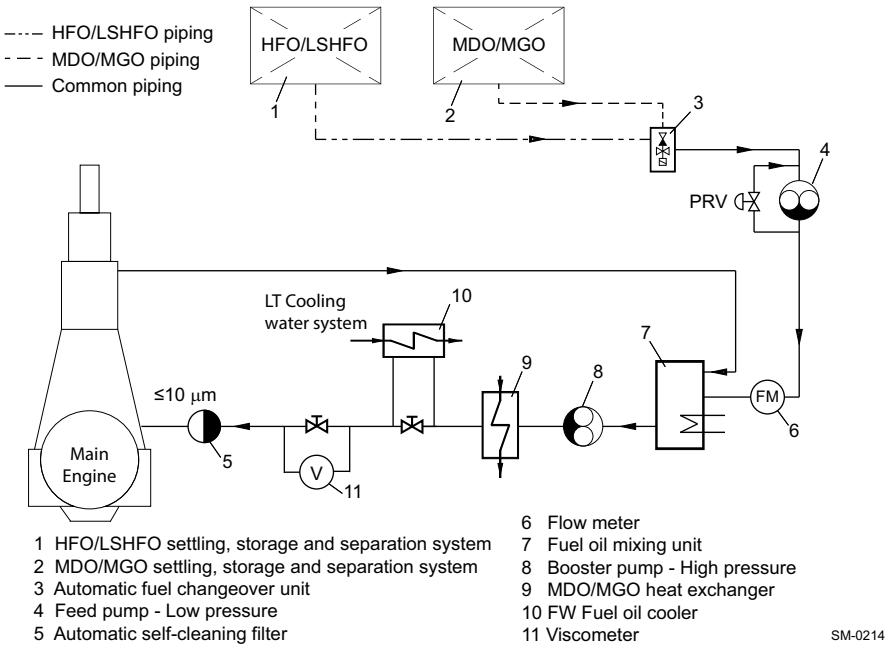

Figure 4-22 Fuel oil filter arrangement 'B'

Arrangement 'B' does not include secondary duplex filtration. It lacks the indication of overall performance of the fuel oil treatment system and gives no indication when the automatic self-cleaning filter fails.

NOTE	WinGD recommends Arrangement 'A' because it is a best practice solution.

4.5.2 Fuel oil system with only MDO/MGO or MGO

If the main engine is designed for only MDO/MGO or MGO fuel oil, the system can be simplified in comparison to the conventional system specified in section 4.5.1 Fuel oil system components, 🗎 4-41.

The changes are as follows:

- The fuel oil mixing unit is omitted.
- The fuel oil end-heater is omitted, along with the associated viscometer and control logic.
- The simplified fuel oil filter arrangement like that in arrangement 'B' is applied.

Additional optional changes:

- The feed pump and booster pump can be replaced with a single delivery pump. If this option is selected, the pump must be located in the recirculation piping and must not be too high relative to the fuel oil tanks (see (d)H in Figure 4-23, 🗎 4-53). This must be in accordance with the manufacturer's specification.

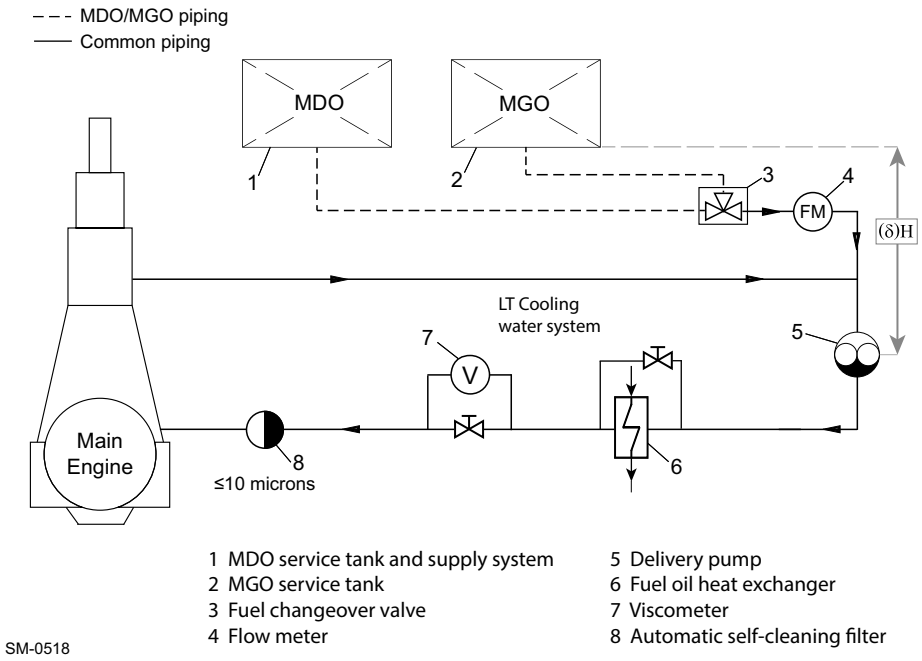

Figure 4-23 Fuel oil system: Arrangement with only MDO/MGO or MGO

NOTE	The omission of iCAT can occur with engines specified to operate on liquid fuel with ultra low sulphur content (maximum 0.10% m/m sulphur). For further information, see section 4.3.6 Cylinder Lubricating Oil system, 🗎 4-20.

Fuel oil feed pump

To correctly deliver the fuel oil to the engine, the fuel oil service tank arrangement must provide the required inlet pressure for the fuel oil feed pump, as defined by the supplier.

Type	Positive displacement screw pump with built-in safety valve
Capacity	According to *GTD*, with a tolerance of 0% to +20% of the GTD value
Inlet pressure	As defined by the supplier
Delivery head	Ensure an engine inlet pressure of 10 bar(g) at main engine stop condition, with consideration of pressure loss over piping and static height; refer to *GTD*.
Working temperature	Up to 60°C

Fuel oil heat exchanger

The standard proposal for MDO and MGO (compliant to ISO 8217:2017) is a heat exchanger without temperature or flow control. The viscosity of the MDO and MGO is kept within the acceptable range for engine operation if the fuels are cooled by freshwater from the central cooling system (with temperatures between 25°C and 36°C). A chiller unit (cooling from refrigeration) can be needed for off-spec fuels that are not supported by WinGD.

Fuel oil filter

An automatic self-cleaning filter with a maximum of 10 mm mesh size must be installed close to engine inlet, as shown in Figure 4-23, 🗎 4-53. The working temperature is up to 60°C.

4.5.3 Flushing the fuel oil system

For further information on flushing of the fuel oil system, please refer to the latest version of the relevant instruction ("DG 9723 Fuel Oil System") available on WinGD web page: *Instruction for flushing – Fuel oil system*.

4.5.4 Fuel oil treatment

The latest version of the document "Fuels" is available on WinGD web page: *Fuels*.

Settling tanks

Gravitational settling of water and sediment from modern heavy fuel oils is an extremely slow process due to small difference in densities. The time required for settling depends on the tank depth, as well as on the viscosity, temperature and density difference. Tanks that are shallower with a wider diameter enable better separation than thinner taller tanks.

Further design features consider a level monitoring device and remote closing discharge valves to the separator(s) and engine systems, a connection to an overflow tank, and a self-closing cock just above the bottom of the tank to remove sludge and water.

Service tanks

Most of the service tank design features are similar to the settling tanks, however, there is no direct connection to the overflow tank. Instead a recirculating line, with an inlet just above the bottom of the service tank, leads back to the settling tanks.

Diesel oil service tanks are similar to heavy oil service tanks, with the possible exception of tank heating, although this can be incorporated for vessels constantly trading in cold climates.

Water in fuel

Due to condensation or heating coil leakage, water can be present in the fuel after the separators. It can be manually removed by a self-closing cock. In addition, the recirculation connection close to the bottom of the tank ensures that contaminated fuel is recirculated to the settling tank.

Cleaning of fuel

The fuel is cleaned from the settling tank to the service tank. Ideally, when the main engine is operating at CMCR, the fuel oil separator(s) is able to maintain a continual overflow from the service tank to the settling tank. The cock, used to remove sludge and water, must be operated at regular intervals to observe the presence of water, a significant indication for the condition of the separator(s) and heating coils.

Centrifugal fuel oil separators

There are two types of oil separators:

- Type 1: Separators with gravity discs
- Type 2: Separators without gravity discs.

NOTE	Separators with gravity discs are an outdated technology and, thus, are not supported by WinGD.

Separators without gravity discs

These separators are self-adjusting to the fuel properties. They are self-cleaning. Separators without gravity discs operate as combined purifiers-clarifiers, thus, water and sediment separation is integrated in one unit. The manufacturers claim extended periods between overhaul. Compared to the outdated separators with gravity discs, the reliability is greatly improved, enabling unattended onboard operation. As it is usual to install a standby separator as a back-up, it is of advantage to use both units in parallel to improve the separation result. For further details and information on the separators, please refer to the manufacturer's instructions.

Separation efficiency

The separation efficiency is a measure of the separator capability to remove specified test particles. The separation efficiency is defined as follows:

$$n = 100 \cdot \left(1 - \frac{C_{out}}{C_{in}}\right)$$

where:

n ..... = separation efficiency [%]

C_{out} ..... = number of test particles in cleaned test oil

C_{in} ..... = number of test particles in test oil before separator

Certified Flow Rate

To express the performance of separators according to a common standard, the term Certified Flow Rate (CFR) is used and defined as the flow rate in litres/hour, 30 minutes after sludge discharge, at which the separation efficiency is 85% when using defined test oils and test particles. CFR is defined for equivalent fuel oil viscosities of 380 cSt and 700 cSt at 50°C. More information can be found in the CEN document CWA 15375:2005 (E) of the European Committee for Standardization.

Throughput capacity

The required minimum effective throughput capacity (litres/hour) of the separators is determined by the formula 1.2 • *CMCR* • *BSFC* • 10^{-3} [litres/hour], as shown in the example below. The project-specific BSFC value at 100% CMCR power output must be taken from the *GTD*. The nominal separator capacity and the installation must comply with the separator manufacturer's recommendations.

The MDO separator capacity can be estimated using the same formula.

Example

- 8-cylinder engine
- CMCR (R1 selected): 23,200 kW
- BSFC: 167.8 g/kWh
- **Throughput:** 1.2 • 23,200 • 167.8 • 10^{-3} = **4,672 litres/hour**

Fuel oil samples

To ensure that representative samples of fuel oil can be taken, dedicated sampling points (cocks) are provided on the engine side. Such cocks need also to be installed on the system side, according to the relevant system proposal drawing in *MIDS*.

4.5.5 Pressurised fuel oil system

The fuel is supplied from the heated heavy fuel oil service tank or the unheated diesel oil service tank to the low-pressure feed system.

Fuel changeover

For changeover from one fuel type to the other it was common to have a simple, manually operated three-way valve. This arrangement is not recommended any longer, as with the introduction of different Emission Control Areas (ECA), fuel changeover is quite frequently required, even at high engine load. In the past it was needed in rare cases only, e.g. due to maintenance or before stopping the engine, i.e. at relatively low loads.

Automatic changeover unit

A well proven automatic changeover unit is nowadays recommended. It must ensure:

- maximum temperature gradient of 2 K/min during changeover
- maximum viscosity of 20 cSt
- minimum viscosity of 2 cSt; this minimum limit is most challenging during changeover from HFO to distillate fuel.
  Attention: Not all changeover units guarantee keeping the minimum viscosity limit, as viscosity is not controlled.
- best-practice automatic control of diesel oil cooler activation.

4.5.6 Fuel oil specification

The validated fuel oil qualities are available in the respective document on WinGD web page: *Fuels*.

4.5.7 Fuel oil viscosity-temperature dependency

The fuel oil viscosity depends on its temperature. This dependency is shown in Figure 4-24, 🗎 4-57.

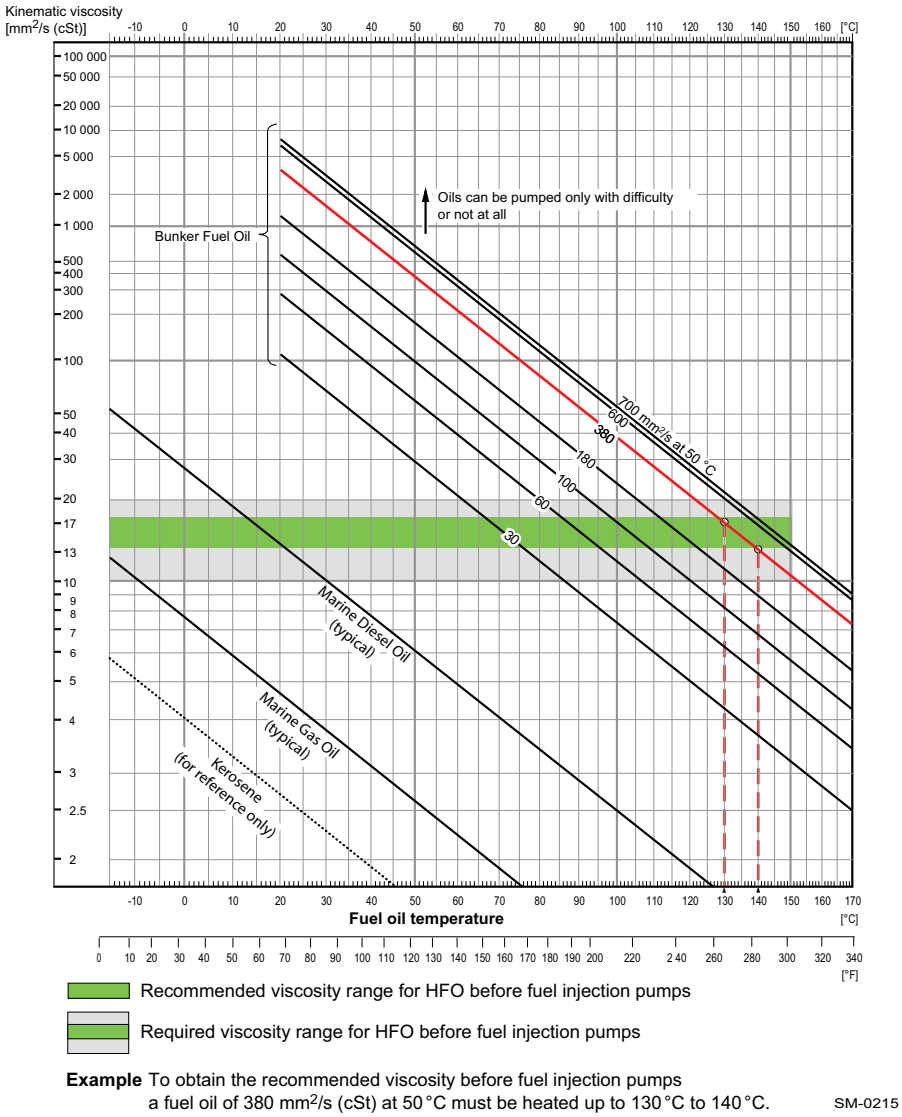

Figure 4-24 Fuel oil viscosity-temperature diagram

4.6 Air supply system

The latest version of the MIDS "DG 9725 Air Supply System" is available on WinGD web page: *MIDS*.

Compressed air is required for engine starting and control, exhaust valve air springs, washing plant for SAC(s) and general services.

The starting and control air system shown in Figure 4-25, 🗎 4-58 comprises two air compressors, two air receivers, and systems of pipework and valves connected to the engine starting air manifold.

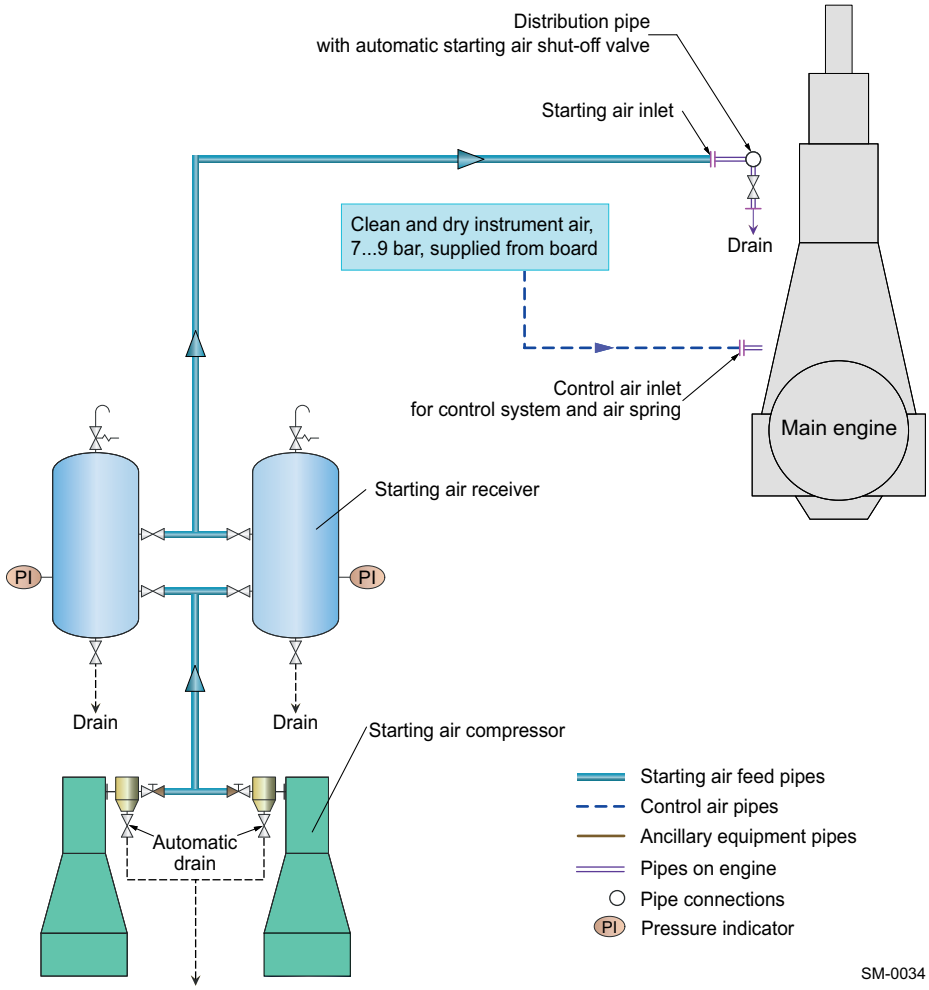

Figure 4-25 Air supply system

4.6.1 Capacities of air compressor and receiver

The capacity of the air compressor and receiver depends on the total inertia (J_{tot}) of the propulsion system rotating parts.

- Total inertia = engine inertia + shafting and propeller inertia [1]:
  $J_{tot} = J_{eng} + J_{S+P}$
- Engine inertia (J_{eng}): refer to *GTD*[2]
- Relative inertia:
  $J_{rel} = \frac{J_{tot}}{J_{eng}}$

4.6.2 System specification

Starting air compressors

Capacity	Refer to *GTD*
Delivery gauge pressure	25 bar or 30 bar

The discharge air temperature must not exceed 90 °C. Air supply to the compressors must be as clean as possible without oil vapour.

Starting air receivers

Type	Fabricated steel pressure vessels with domed ends and integrated pipe fittings for isolating valves, automatic drain valves, pressure reading instruments and safety valves
Capacity	Refer to *GTD*
Working gauge pressure	25 bar or 30 bar

1) Propeller inertia includes the part of entrained water.
2) *GTD* enables the capacities of compressors and air receivers to be optimised for the inertia of the engine and shaft line.

4.6.3 Control air

Control air supply system

Control air is supplied from the board instrument air supply system (see Figure 4-25, 🗎 4-58) providing air at 8 bar gauge pressure (within a range of 7.0–9.0 bar). The air quality must comply with the compressed air purity class 5-4-3 according to ISO 8573-1 (2010-04-15).

Control air consumption

The required control air flow capacities are shown in Table 4-12, 🗎 4-60. These data can be used for sizing the relevant engine external piping and facilities.

Table 4-12 Control air flow capacities

No. of cyl.	Control air flow capacity [Nm^3/h]
5	12.0
6	14.4
7	16.8
8	19.2

4.6.4 Service and working air

Service and working air for driving air powered tools and assisting in the cleaning of the SAC(s) is also provided by the board instrument air supply system.

4.7 Exhaust gas system

The MIDS "DG 9726 Exhaust System" is available on WinGD web page: *MIDS.*

Explosion relief devices

An explosion relief device examined and certified by the maker, with flameless pressure relief, must be selected and installed within the exhaust system in accordance with class requirements. The position and number of explosion relief devices must be determined by the system designer or the shipyard through calculation.

Independent of the selected type of explosion relief device, the distance of the explosion relief device to gangways, working areas and system components must be at least 3 m to not endanger personnel and/or to avoid material damage.

When a rupture disc with flameless pressure relief is selected and installed, preventative measures must be taken to ensure that exhaust gas does not continuously flow to the outside after rupture. This can be achieved with an exhaust gas duct leading to the open deck, or in the case of a twin-engine installation by sending a control signal to the Alarm and Monitoring System (AMS) requesting a shutdown of the engine. If either of these options is not possible, a self-closing, spring loaded valve must be used. This will remove the peak pressure of an explosion, while ensuring that the exhaust gas does not continuously flow outside.

Back pressure

The exhaust gas back pressure must be kept in the range as defined in the *MIDS* ("DG 9726 Exhaust System") and as mentioned in section 3.12.3 Ancillary systems design parameters, 3-22. To meet the specified back pressure requirements, the exhaust gas flow velocity must be considered.

Flow velocities

For an optimised exhaust gas system the following velocities are recommended for pipes A, B and C shown in Figure 4-26, 4-61:

Pipe A ..... = 40 m/s
Pipe B ..... = 25 m/s
Pipe C ..... = 35 m/s

For further information on the pipe diameters, please refer to *GTD*.

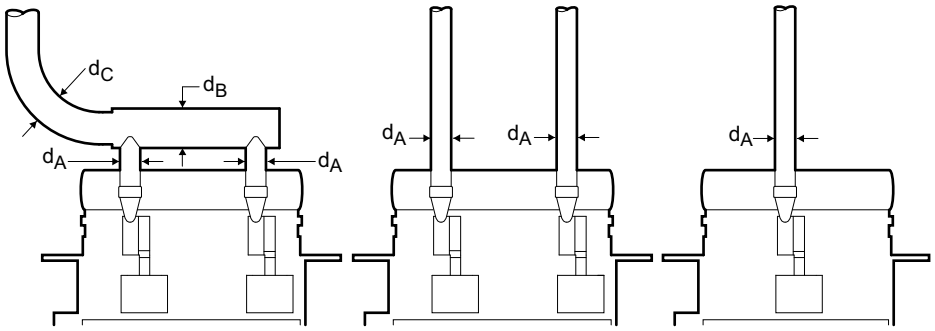

Figure 4-26 Determination of exhaust pipe diameter

4.8 Engine room ventilation

Proper engine room ventilation is essential to ensure trouble-free operation of all equipment. It is important that the ventilation requirements, ventilation arrangement, air quality and outside ambient air temperature are taken into consideration.

4.8.1 Ventilation requirements

Engine room ventilation must conform to the requirements specified by the legislative council of the vessel's country of registration and the classification society selected by the ship owner.

Calculation methods for combustion air flow requirements and for avoiding excessive heating of the machinery spaces are provided in the international standard ISO 8861 "Shipbuilding – Engine-room ventilation in diesel-engined ships – Design requirements and basis of calculations".

The engine combustion air is considered and typically provided as part of the overall engine room ventilation system. Approximately 50% of the overall engine room ventilation air is for the main engine combustion, while the other half is used for the auxiliary engines, the boilers and to provide sufficient cooling for equipment in the engine room. Thus, it is vitally important that the ventilation system for the engine room has sufficient capacity to supply the necessary air flow for all engine room needs.

The heat emissions, required air flow and estimated power for the layout of engine room ventilation can be obtained from *GTD*. These values consider the ISO 8861 standard, however, in some circumstances the results are different from the standard calculations. In these cases, WinGD provides the specific engine values and they must be considered before ISO 8861.

It must be noted that the engine requires less combustion air when not running at full load. It provides potential energy savings by reducing the frequency of the ventilation fans when demand is low. This process can be automated, interfacing with the engine, if requested.

4.8.2 Ventilation arrangement

It is important to follow best practice methods of supplying combustion air for the main engine as described in this section. However, the final layout of the engine room ventilation is at the discretion of the shipyard.

Two different ventilation arrangements

Experience shows that the air flow in the engine room, from the ventilation system outlet to the turbocharger inlets, must be as direct as possible. This increases the amount of air directly supplied to the turbocharger, limiting heat transfer to the air flow and, thus, providing the best possible engine performance, especially during tropical conditions.

Alternatively, a ventilation system with a direct air suction layout can be arranged, where the ventilation system connects the outside ambient air directly to the engine.

Two different arrangements are the following:

- **Arrangement 1**: Engine room ventilation system (Figure 4-27, 🗎 4-64)
  The ventilation system draws air from the outside ambient air into the engine room, where it is sucked into the turbocharger inlet.
- **Arrangement 2**: Direct engine ventilation system (Figure 4-28, 🗎 4-65)
  The ventilation system outlet is connected to the turbocharger inlet. Thus, the outside ambient air is sucked directly into the turbocharger without passing through the engine room.

NOTE	In both arrangements, the ventilation inlets must be located and designed to ensure that water spray, rain water, dust and exhaust gases cannot enter the system or the engine room.

Arrangement 1: Engine room ventilation system

Functional principle

The ventilation system draws air from outside the vessel using ventilation fans at the inlet. Ventilation inlets are typically protected with a weather hood and louvres to minimise the amount of water and other particles entering the system. The air travels to the engine room where it leaves the ventilation outlets and enters the engine.

Layout

The engine room ventilation must be arranged so that the main engine combustion air is delivered directly to the turbocharger inlet, locating the ventilation outlet and turbocharger inlet as close as possible, and directly facing each other, ensuring a smooth and direct flow of air.

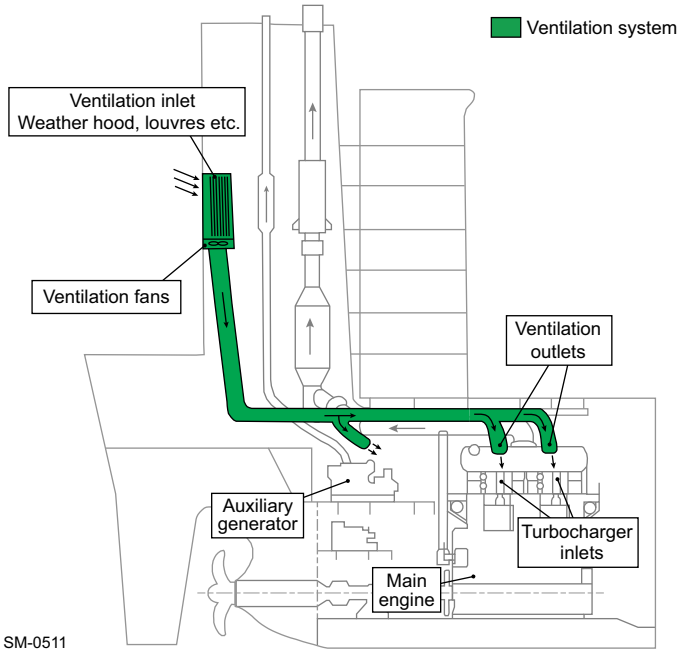

Figure 4-27 Ventilation system arrangement 1: Engine room ventilation system

By ensuring that the air flow from the ventilation outlet to the turbocharger inlet is as direct as possible, the air intake is at its coolest. The ventilation arrangement must limit air from the engine room, mixing with inlet air and entering the turbocharger. Limiting this heating effect keeps the engine specific fuel consumption low.

Turbocharger with filter

The turbocharger is fitted with a filter silencer that reduces noise and prevents large items from entering the turbocharger. Most turbocharger manufacturers supply an optional secondary fibre or mat filter that can further remove particles and oil mist. This can reduce the effort required for SAC cleaning.

NOTE	WinGD recommends the optional secondary filter to further assist with removing fine particles and oil mist that can be in the engine room.

Arrangement 2: Direct engine ventilation system

Layout

In this arrangement, the ventilation outlets are coupled with the turbocharger inlets. As the turbochargers directly receive all the outside ambient air drawn via the ventilation system, there is little chance for the temperature to increase. As a result, this arrangement delivers cooler air to the engine than in 'Arrangement 1', reducing the engine Brake Specific Fuel Consumption (BSFC).

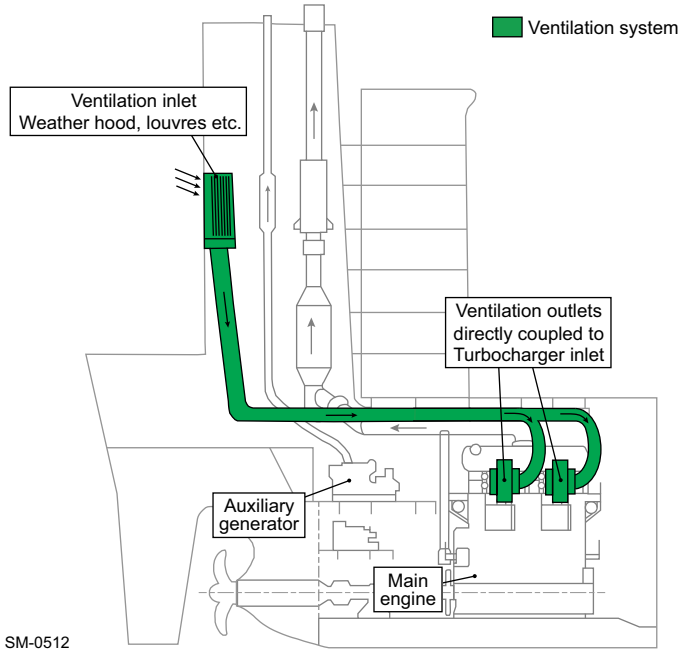

Figure 4-28 Ventilation system arrangement 2: Direct engine ventilation system

The outside ambient air is drawn through the ventilation system by the turbochargers, and, thus, there is no need for ventilation fans in this arrangement. However, it is still essential that the ventilation inlet is protected, typically with a weather hood and louvres. A separate filter unit, if required, can also be fitted here, within the inlet housing.

It must be taken into account that the maximum permissible pressure drop through the suction duct, including filter and silencer, must be limited up to 20 mbar.

Requirements

The engine room ventilation system is provided with separate ventilation fans and ducting. It must be appropriately sized to provide comfortable working conditions in the engine room, supply the necessary combustion air for auxiliary generator(s) and the boiler, and to prevent heat-sensitive apparatus from overheating.

As the main engine combustion air is no longer provided for by the engine room ventilation system, the energy demand of the ventilation fans is reduced compared to 'Arrangement 1'.

4.8.3 Air intake quality

Air intake quality can vary depending on the circumstances of the vessel. For example, suction air is expected to have a dust content of 0.5 mg/m^3 or higher if a vessel carries dusty or dust-creating cargoes, such as iron ore and bauxite, or if it is often in port, trading in coastal waters and desert areas. In these cases, the air must be filtered before it enters the engine (see Table 4-13, 🗎 4-66).

Dust filters

The concentration and composition of dust in the suction air dictates the necessity to install a dust filter and the choice of filter type. The normal air filters fitted as standard to the turbochargers are intended mainly as silencers but not to protect the engine against dust. If air supply to machinery spaces has a dust content exceeding 0.5 mg/m^3, there is a risk of increased wear to the piston rings and cylinder liners.

NOTE	WinGD recommends to install a filtration unit on vessels regularly transporting dust-creating cargoes or trading in areas of atmospheric dust.

Table 4-13 Guidance for air filtration

Dust concentration in ambient air			
Normal	**Normal shipboard requirement**	**Alternatives necessary in very special circumstances**	
Most frequent particle sizes	**Short period <5% of running time, <0.5 mg/m^3**	**Frequently to permanently ≥0.5 mg/m^3**	**Permanently >0.5 mg/m^3**
>5 µm	Standard TC filter sufficient	Oil wetted or roller screen filter	Inertial separator and oil wetted filter
<5 µm	Standard TC filter sufficient	Oil wetted or panel filter	Inertial separator and oil wetted filter
---	Normal requirement for the vast majority of installations	These alternatives apply most likely to only very few extreme cases, e.g. ships carrying bauxite or similar dusty cargoes, or ships routinely trading along desert coasts.	

All filter surfaces must be sized correctly to ensure full functionality of the filtration. It depends on maximum power output of the engine, as shown in Figure 4-29, 🗎 4-67.

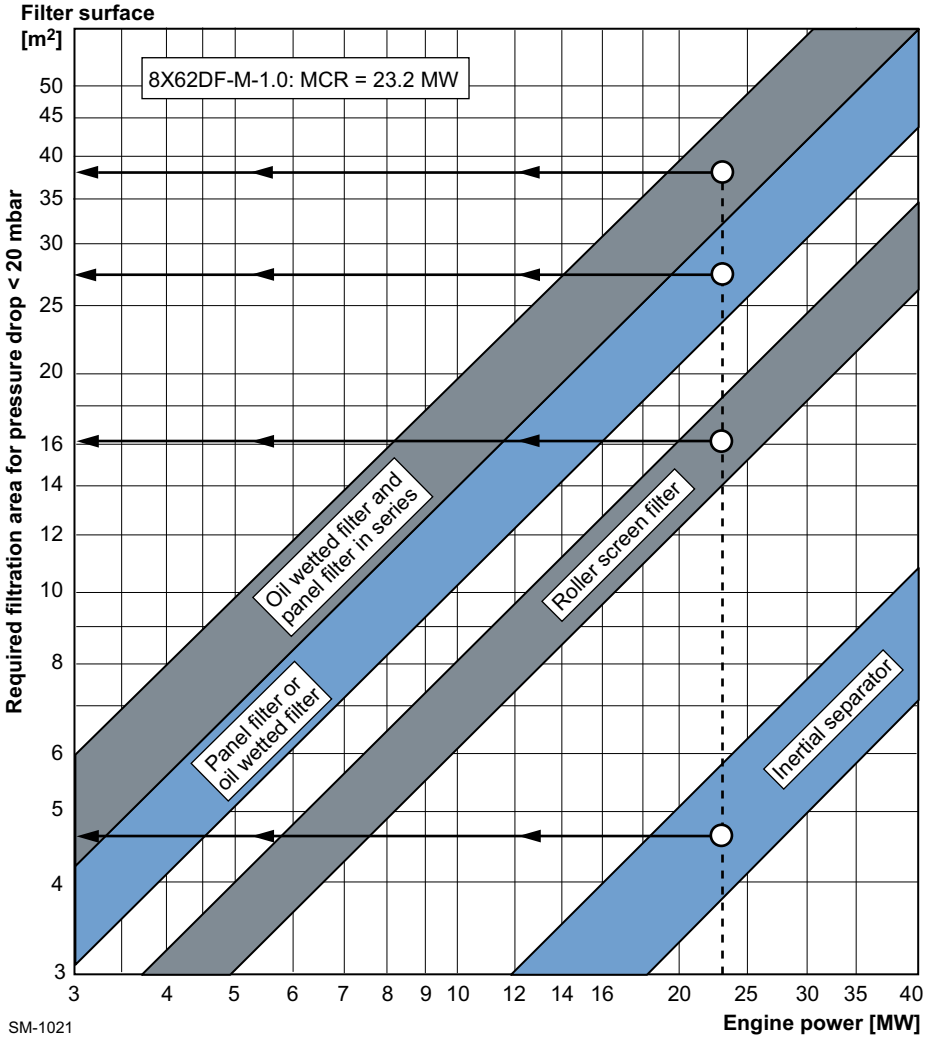

Figure 4-29 Air filter size (example for 8-cylinder engine)

4.8.4 Outside ambient air temperature

The intake air temperature can vary greatly depending on the area of operation, and as the engine can operate over a wide range of ambient air temperatures, hot and cold limits must be considered.

When operating within the normal temperature range of -10°C to 45°C (see 3.12.2 Operating conditions, 🗎 3-21), the engine does not require any special measures (i.e. no separate scavenge air heater is required). When operating below -10°C, the exhaust gas waste gate must be designed project specifically. Thus, please contact WinGD to get the project-specific layout. In addition, the requirements of the turbocharger maker, as shown in Table 4-14, 🗎 4-68, must be considered. When operating above 45°C, the power output of the engine can be limited (please contact WinGD for the project specific calculations).

NOTE	No special measures are required for engine operation within the normal temperature range of -10°C to 45°C.

Table 4-14 Operational temperature range requirements of the turbocharger

Turbocharger maker	Operational temperature range	Requirements
Accelleron	-40°C to 45°C	No additional requirements
MHI	<0°C	• Tachometer sensor, silencer materials and manometer materials (vinyl tube and liquid) must be changed. • Impeller tightening pressure must be increased. • Warm-up operation is recommended.
	0°C to 45°C	No additional requirements

NOTE	The requirements in the above table will be automatically updated without notice by the turbocharger maker. For up-to-date requirements, please refer to the turbocharger maker's specifications.

4.9 Piping

4.9.1 Pipe connections

The latest version of "DG 8020 Pipe Connection Plan" is available on WinGD web page: *Drawings – Pipe Connection Plan*.

4.9.2 Fluid velocities and flow rates

For the different media in piping, WinGD provides recommended fluid velocities and flow rates, as stated in the document "DG 9730 Various Installation Items". The pump delivery head proposals provided by *GTD* are based on system layouts which follow these recommended values. However, the values which are provided by this document are only for guidance purposes and the final pump layout must account for the final system layout. The values are based on the optimisation between installation and operating costs (pump energy). National and shipyard standards can also be applied.

The latest version of the document "DG 9730 Various Installation Items – Fluid Velocities and Flow Rates" is available on WinGD web page: *Fluid Velocities and Flow Rates*.

4.10 PTO, PTI, PTH and primary generator applications

WinGD proposes various Power Take-Off (PTO) and Power Take-In (PTI) arrangements that improve the efficiency and usability of the vessel propulsion chain. Some of the proposals are suitable as Power Take-Home (PTH) devices, which enable the vessel to immobilise the main engine while remaining capable of moving. Furthermore, the primary generator enables the vessel to generate electric power by the main engine without running the propeller.

A PTO/PTI/PTH solution can be applied on the driving end side, while a PTO solution can also be applied on the free end side.

For installation of a PTO/PTI/PTH on the driving end side, a shaft power meter and an earthing device (see section 3.9.2 Earthing device, 🗎 3-17) must be placed between the PTO/PTI/PTH and the main engine flywheel.

NOTE	All other alternatives are subject to a detailed project-specific study and definition. Please consult WinGD via their licensee.

4.10.1 Requirements

After selecting the engine:

1) Define the shaft power and the shaft speed.
2) Estimate the electric power demand for propulsion purpose.
3) Evaluate which of the PTO / PTI systems is most suitable.
4) Select suitable electrical components, like frequency converter etc.

NOTE	The type of the PTO/PTI system has an influence on the execution of the main engine. Thus, changing from one system type to another is possible in the project stage but not after having ordered the engine.

4.10.2 Arrangements for PTO, PTI, PTH and primary generator

Figure 4-30, 🗎 4-71 illustrates different arrangements for PTO, PTI, PTH and primary generator.

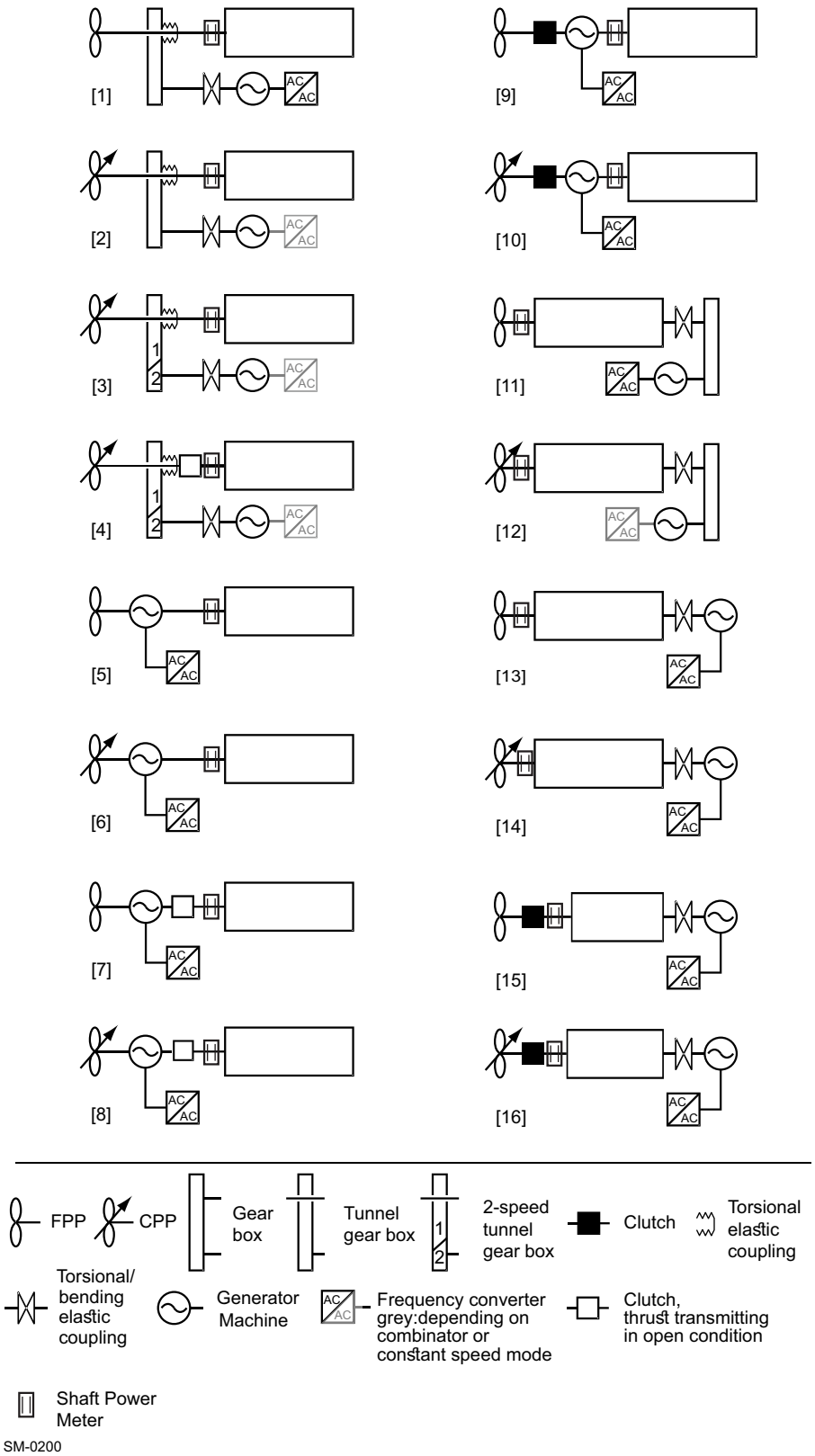

Figure 4-30 Arrangements for PTO, PTI, PTH

The following table itemises the arrangements corresponding to the numbers in Figure 4-30, 🗎 4-71.

Table 4-15 PTO/PTI/PTH arrangements

[1]	[2]	[3]	[4]	[5]	[6]	[7]	[8]	[9]	[10]	[11]	[12]	[13]	[14]	[15]	[16]
X	X	X	X	X	X	X	X	X	X	X	X	X	X	X	X
'X' means that the arrangement is possible for this engine.															

NOTE	Please check the application of arrangements for the selected engine with WinGD via their licensee. Project dependent options can also be considered.

4.10.3 Application constraints

The feasibility of project-specific PTO / PTI / PTH and primary generator needs to be studied in any case. An overview of impacts is given in Table 4-17, 🗎 4-73.

Table 4-16 Possible options

	Arrangements (see Figure 4-30, 🗎 4-71)															
Option	**[1]**	**[2]**	**[3]**	**[4]**	**[5]**	**[6]**	**[7]**	**[8]**	**[9]**	**[10]**	**[11]**	**[12]**	**[13]**	**[14]**	**[15]**	**[16]**
PTO	X	X	X	X	X	X	X	X	X	X	X	X	X	X	X	X
PTI	X	X	X	X	X	X	X	X	X	X	O	O	O	O	O	O
PTH	O	O	O	X	O	O	X	X	O	O	O	O	O	O	O	O
Primary generator	O	O	O	O	O	O	O	O	X	X	O	O	O	O	X	X
Remarks	a)	a) b)	a) b)	a) b)					c)	c)	a)	a) b)			c)	c)
X = the option is possible O = the option is not possible																

a) If the lowest torsional natural frequency is <1.5 Hz, special care must be taken regarding possible engine speed fluctuations.
b) In case the electric generator / motor is operated at variable speed (Controllable Pitch Propeller (CPP) combinator mode), a frequency converter is needed.
c) With de-clutched propeller and pure generator operation, the minimum engine load requirement must be obeyed.

Permanent Magnet

If 'Permanent Magnet' type generators or electric motors are installed, special attention must be given to the alignment issue. Due to the low rotor mass in relation to magnetic forces, a potential risk of unloaded shaft bearings can exist. Additionally, bearing load measurements can be falsified by the influence of permanent-magnetic pull force.

Table 4-17 Influence of options on engineering

Engineering	Arrangements (see Figure 4-30, 🗎 4-71)															
	[1]	[2]	[3]	[4]	[5]	[6]	[7]	[8]	[9]	[10]	[11]	[12]	[13]	[14]	[15]	[16]
Extended TVC	X	X	X	X	X	X	X	X	X	X	X	X	X	X	X	X
Misfiring detection	(X)	(X)	(X)	(X)	O	O	O	O	O	O	(X)	(X)	(X)	(X)	(X)	(X)
Impact on ECS	(X)	(X)	(X)	(X)	(X)	(X)	(X)	(X)	(X)	(X)	(X)	(X)	(X)	(X)	(X)	(X)
Shaft alignment study	(X)	(X)	(X)	(X)	X	X	X	X	X	X	(X)	(X)	(X)	(X)	X	X
Bearing load due to external load	(X)	(X)	(X)	(X)	X	X	X	X	X	X	(X)	(X)	X	X	X	X
Dynamic condition due to external load	O	O	O	O	O	O	O	O	O	O	X	X	X	X	X	X

X = the arrangement has an influence on this engineering aspect
(X) = the arrangement might have an influence on this engineering aspect
O = the arrangement has no influence on this engineering aspect

Extended Torsional Vibration Calculation

The added components have a considerable influence on the related project-specific Torsional Vibration Calculation (TVC). Proper case-dependent countermeasures need to be taken depending on the results of the detailed TVC. For further details, see section 6.4.2 PTO / PTI systems effect on torsional vibration, 🗎 6-19.

Misfiring Detection

Depending on the TVC results, a Misfiring Detection device (MFD) can be needed to protect the elastic coupling and the gear-train (if present) from inadmissible torsional vibrations in case of misfiring.

Impact on Engine Control System

The PTO / PTI / PTH application must be analysed via the licensee with the PCS supplier and with WinGD for the ECS.

Shaft alignment study

The added components can have influence on the alignment layout. The shaft bearing layout must be properly selected and adjusted to comply with the given alignment rules. For further information, see section 3.6 Engine and shaft alignment, 🗎 3-13.

Bearing load due to external load

The added components increase the bending moment and the related bearing loads. The bearing loads must be checked for compliance with the given rules.

Dynamic conditions due to external load

The components attached to the free end must be checked for any influence on axial and radial movements of the extension shaft caused by the engine dynamics.

4.10.4 Service conditions

Service condition depends on the selected PTO/PTI/PTH option. Depending on the engine type, there are one or several cases which are illustrated below.

Operation area and prohibited area

The following illustrations indicate how the engine generator unit can be operated. The prohibited operation area is defined in section 2.7 Prohibited operation area, 🗎 2-14.

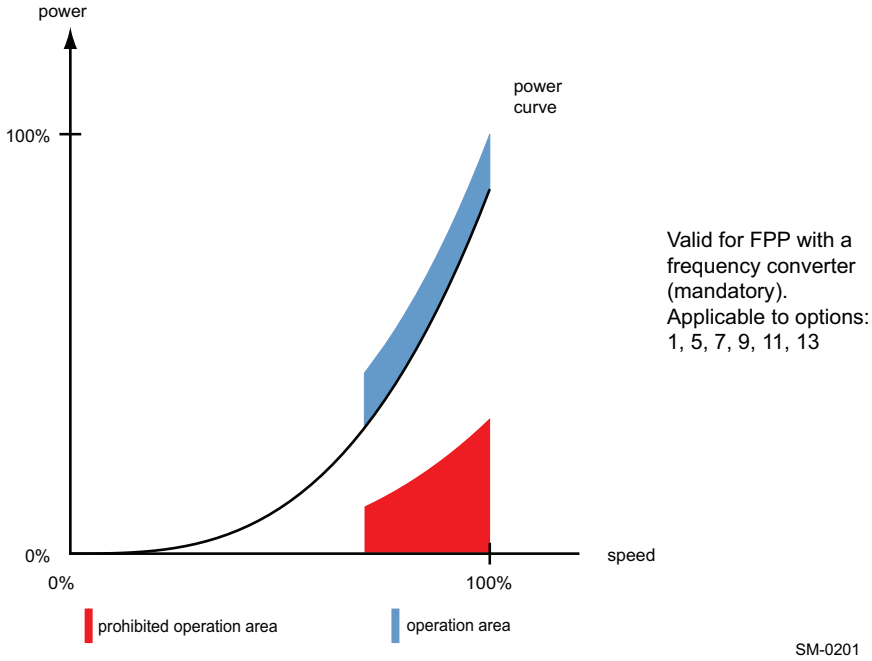

Figure 4-31 FPP with mandatory frequency converter

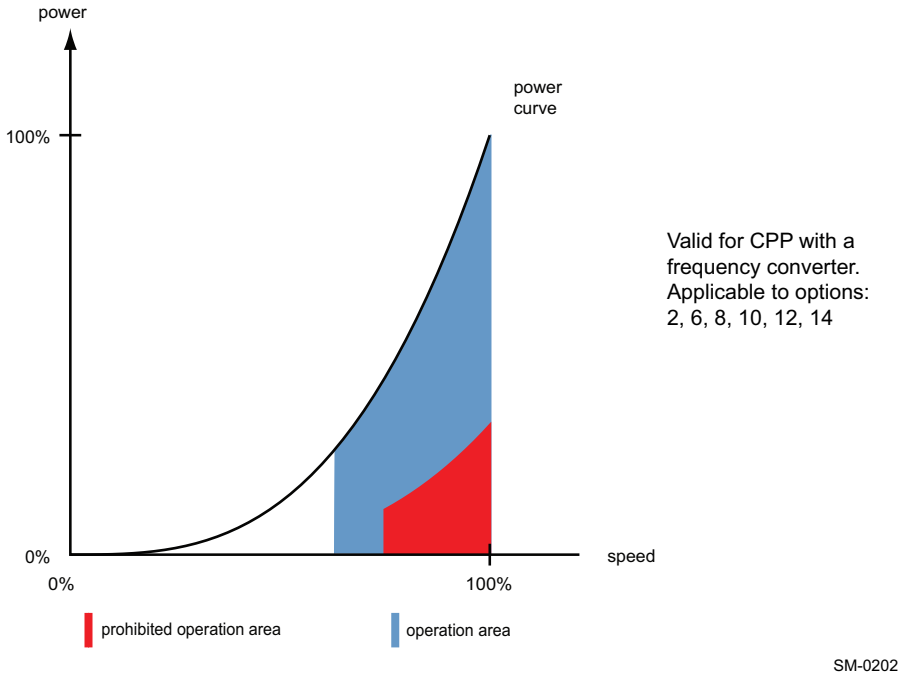

Figure 4-32 CPP in combination with an optional frequency converter

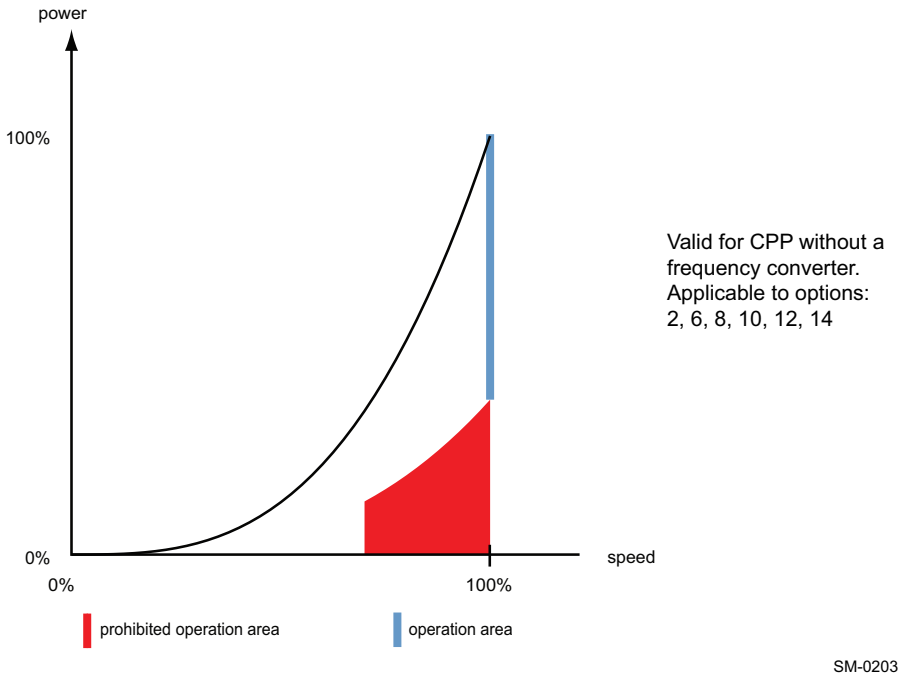

Figure 4-33 CPP in constant speed operation without frequency converter

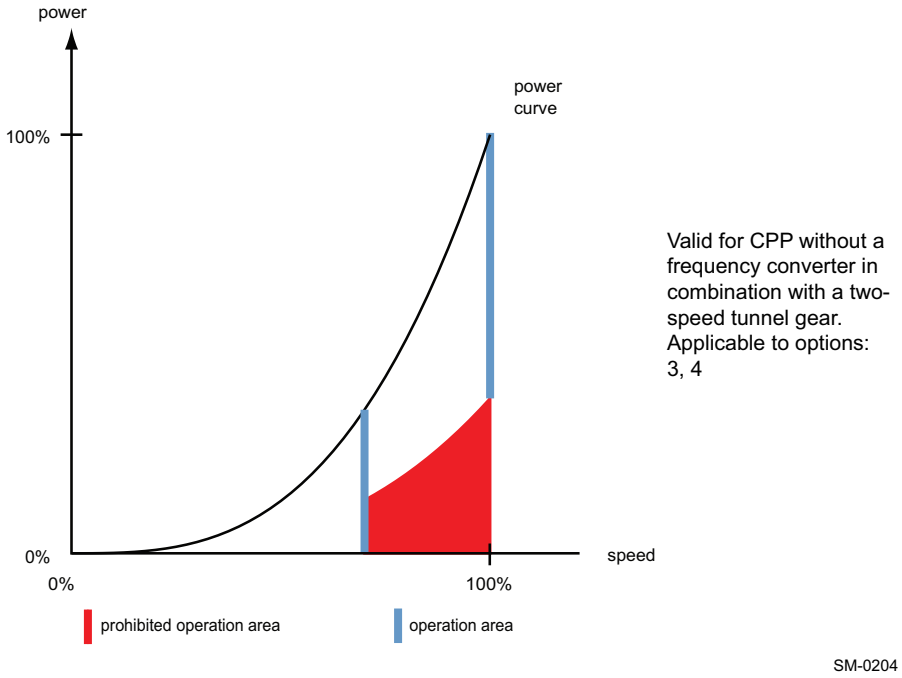

Figure 4-34 CPP with two fixed operation speeds without frequency converter

4.10.5 PTO application

When operating the diesel engine with a PTO, the operation interaction between the engine and PTO must be evaluated. If one of the following conditions applies, project-specific evaluation is required:

- The ratio between PTO mechanical power and CMCR engine power is larger than 20%.
- Operation of PTO is below 50% CMCR engine speed.
- Working as a genset with a disconnected propeller.
- The design requires special conditions, such as ice operation, ice ramming, dynamic positioning etc.

The above-mentioned engine operating conditions require simulation. Additionally, PTO connection and disconnection must be considered with special care. WinGD offers advisory services to assess feasibility of such configurations.

Further services for evaluation of engine performance and X-EL advisory services

WinGD provides project-specific support services for safe engine operation (e.g. PTO/PTI applications, disengaged propeller operation etc.), including X-EL systems and integration (e.g. PTO, battery-hybrid systems and energy management control).

Please contact WinGD via the following e-mail address, along with any further questions:
electrification@wingd.com

WinGD Ltd.
Sustainability Solutions
Schützenstrasse 3
8400 Winterthur
Switzerland

4.10.6 PTO testing

For testing purposes, the engine must have a complete TVC performed. If confirmed by the calculation, the engine can be operated at the CMCR speed and low load during a one-time period of 15 minutes on the testbed and 30 minutes during dock trials (e.g. shaft generator adjustment) in the presence of an authorised representative of the engine builder. If required, the test can be repeated. For further information, please refer to the Guideline on WinGD web page: *Guideline for Shaft Generator Test with Disconnected Propeller during Dock Trial*.

5 Engine Automation

The Engine Control System (ECS) provides data bus connection to the Propulsion Control System (PCS) and the Alarm and Monitoring System (AMS). The AMS is usually provided by the shipyard.

The leading suppliers of PCSs approved by WinGD ensure complete compliance with the engine requirements.

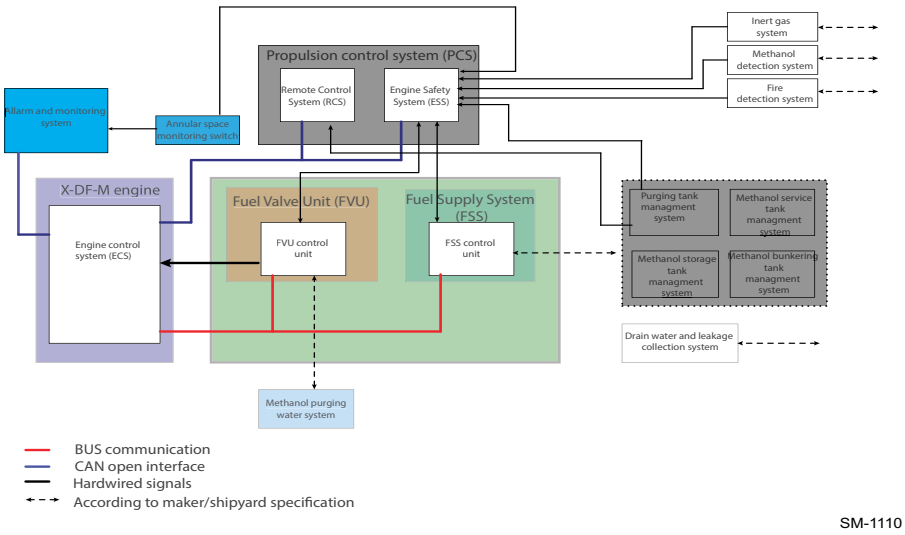

Figure 5-1 Engine automation architecture

5.1 DENIS

The WinGD standard electrical interface **DENIS** is in line with approved PCSs.

DENIS The **D**iesel **E**ngine Co**N**trol and opt**I**mising **S**pecification (DENIS) interface contains specifications for the engine management of all WinGD two-stroke marine diesel engines.

ECS WinGD provides a fully integrated ECS which takes care of all Flex system-specific control functions, e.g. fuel injection, exhaust valve control, cylinder lubrication, crank angle measurement and speed/load control. The system uses modern bus technologies for safe transmission of sensor signals and other signals.

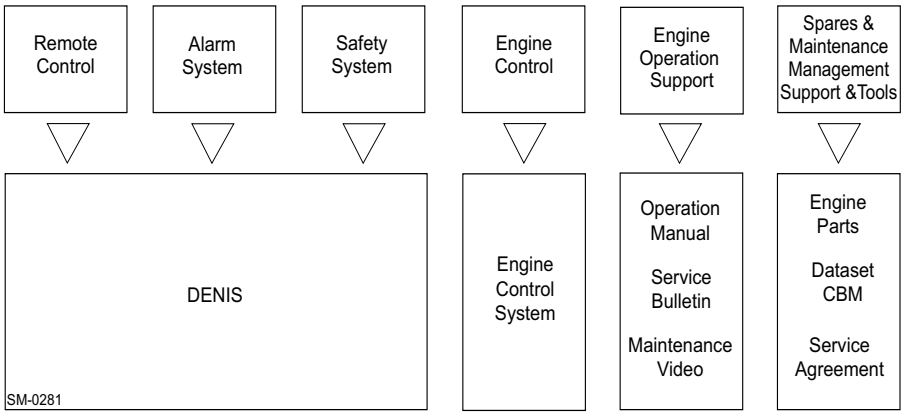

Figure 5-2 Engine management and automation concept

5.2 DENIS concept

The concept of DENIS offers the following features to ship owners, shipyards and engine builders:

5.2.1 Interface definition

The WinGD interface defines the division of responsibilities between the engine builder and the PCS and AMS supplier, enabling the authorised suppliers to adapt their systems to the common rail system engines. The data bus connection provides clear signal exchange.

5.2.2 Approved Propulsion Control Systems

PCSs, including remote control, safety and telegraph systems, are available from suppliers approved by WinGD (see Table 5-1, 🗎 5-4). This cooperation ensures that the systems fully comply with the specifications of the engine designer.

5.3 DENIS specification

The DENIS specification describes the signal interface between the ECS and the PCS and AMS. It does not include any hardware, but summarises all exchanged data and defines the control functions required by the engine. The DENIS specification consists of two sets of documents:

5.3.1 DENIS interface specification

This signal interface specification is made available to engine builders and shipyards. Besides the description of engine-built components for control, alarm and indication, the specification contains the following:

- list of alarm and display functions to be realised in the vessel AMS
- control diagram of the engine
- signal list including a minimum of functional requirements
- information related to the electrical wiring on the engine.

5.3.2 DENIS propulsion control specification

The DENIS document contains a detailed functional specification of the PCS.

The intellectual property rights of this specification remain with WinGD. Hence the document is licensed only to the partner companies of WinGD developing PCSs. These companies offer systems which are built according to the engine designer's specifications and are finally tested and approved by WinGD.

5.4 Propulsion Control Systems

Approved Propulsion Control Systems (PCSs) comprise the following independent sub-systems:

- Remote Control System (RCS)
- safety system
- telegraph system.

The safety and the telegraph systems work independently and are fully operative even with the RCS out of order.

Approved Remote Control Systems suppliers

WinGD has an agreement with the marine automation suppliers listed in Table 5-1, 🗎 5-4 concerning development, production, sale and servicing of the RCS and the safety system. All approved control systems listed in this table comprise the same functionality specified by WinGD.

Table 5-1 Suppliers of Remote Control Systems

Supplier		RCS
Kongsberg Maritime		
Kongsberg Maritime AS P.O. Box 1009 N-3194 Horten / Norway	km.sales@kongsberg.com Phone +47 81 57 37 00 www.km.kongsberg.com	**AutoChief 600**
NABTESCO Corporation		
NABTESCO corp., Marine Control Systems Company 1617-1, Fukuyoshi-dai 1-chome Nishi-ku Kobe, 651-22413 / Japan	newbuilding@nabtesco.com Phone +81 78 967 5361 www.nabtesco.com	**M-800-V**
Wärtsilä Lyngsø Marine A/S		
Wärtsilä SAM Electronics GmbH Behringstrasse 120 D-22763 Hamburg / Germany	www.sam-electronics.de	**Wärtsilä NACOS PCS Platinum**
Wärtsilä Lyngsø Marine A/S 2, Lyngsø Allé DK-2970 Hørsholm / Denmark	jan.overgaard@wartsila.com Phone +45 45 16 62 00 www.wartsila.com/lyngsoe	
CSSC-SERI		
CSSC Systems Engineering Research Institute 1 Fengxian East Road Haidian District, Beijing / P.R. China	aba11@163.com Phone +86 10 59516730 http://seri.cssc.net.cn/	**CSSC-SERI-RCS-B01**

Modern RCSs consist of electronic modules and operator panels for display and order input in the Engine Control Room (ECR) and on the bridge (see Figure 5-3, 🗎 5-5). The different items normally communicate via serial bus connections. The engine signals described in the DENIS specification are usually connected via terminal boxes on the engine with the electronic modules placed in the ECR.

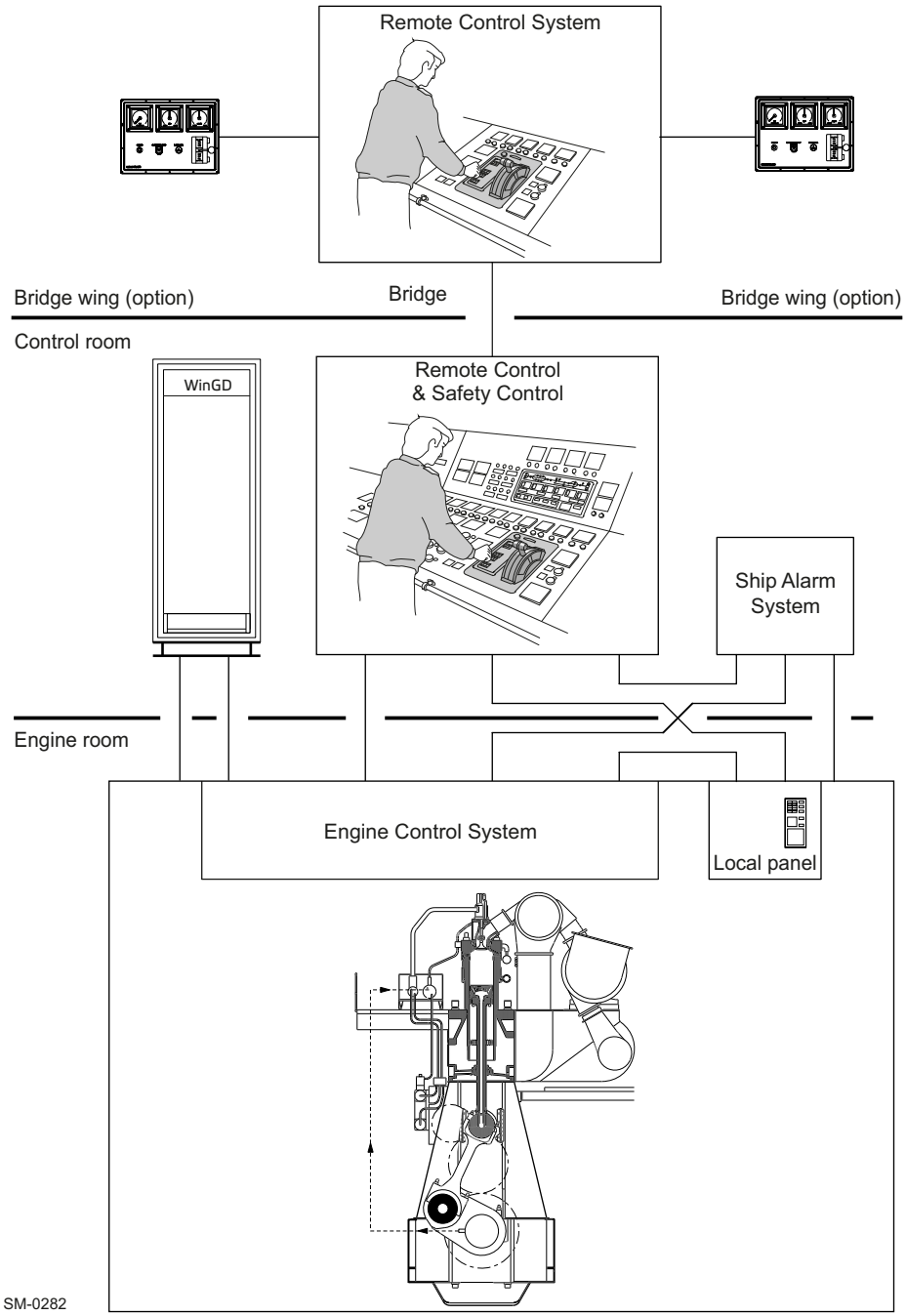

Figure 5-3 Remote Control System

The electronic modules are in most cases built to be placed either inside the ECR console, or in a separate cabinet to be located in the ECR. The operator panels must be inserted in the ECR console surface.

5.4.1 Functions of the Propulsion Control System

Remote Control System

Main functions

- start, stop, reversing
- speed setting
- automatic speed program.

Indications

- The RCS is delivered with control panels for local, ECR and bridge control, including all necessary order input elements and indications, e.g. push buttons / switches and indication lamps or alternatively a respective display.
- The following conditions in the engine are specified by the DENIS to be indicated as a minimum:
  - in the control room:
    - starting air pressure
    - engine speed
    - revolutions
    - operating hours
    - load
    - turbocharger speed
    - scavenge air pressure in air receiver
  - on the bridge:
    - starting air pressure
    - engine speed
- In addition to these indications, the RCS applied to the common rail system engine includes displaying the primary values from the ECS, like fuel pressure, servo oil pressure, etc.

Safety system

Main functions

- emergency stop
- overspeed protection
- automatic shutdown
- automatic slowdown.

Telegraph system

- order communication between the different control locations.

Local manual control

- Local manual control of the engine is performed from a control panel on the engine. The panel includes elements for manual order input and indication for the safety system, telegraph system and the ECS.
- The local control box with the local manual control panel is included in the package delivered by approved RCS suppliers.

Engine Control System manual control panel

- A manual control panel delivered together with the PCS and fitted in the ECR console allows operating the engine manually and independently of the RCS.
- The functions of the ECR manual control are identical to the control functions on the engine local control panel.

Options

- bridge wing control
- command recorder.

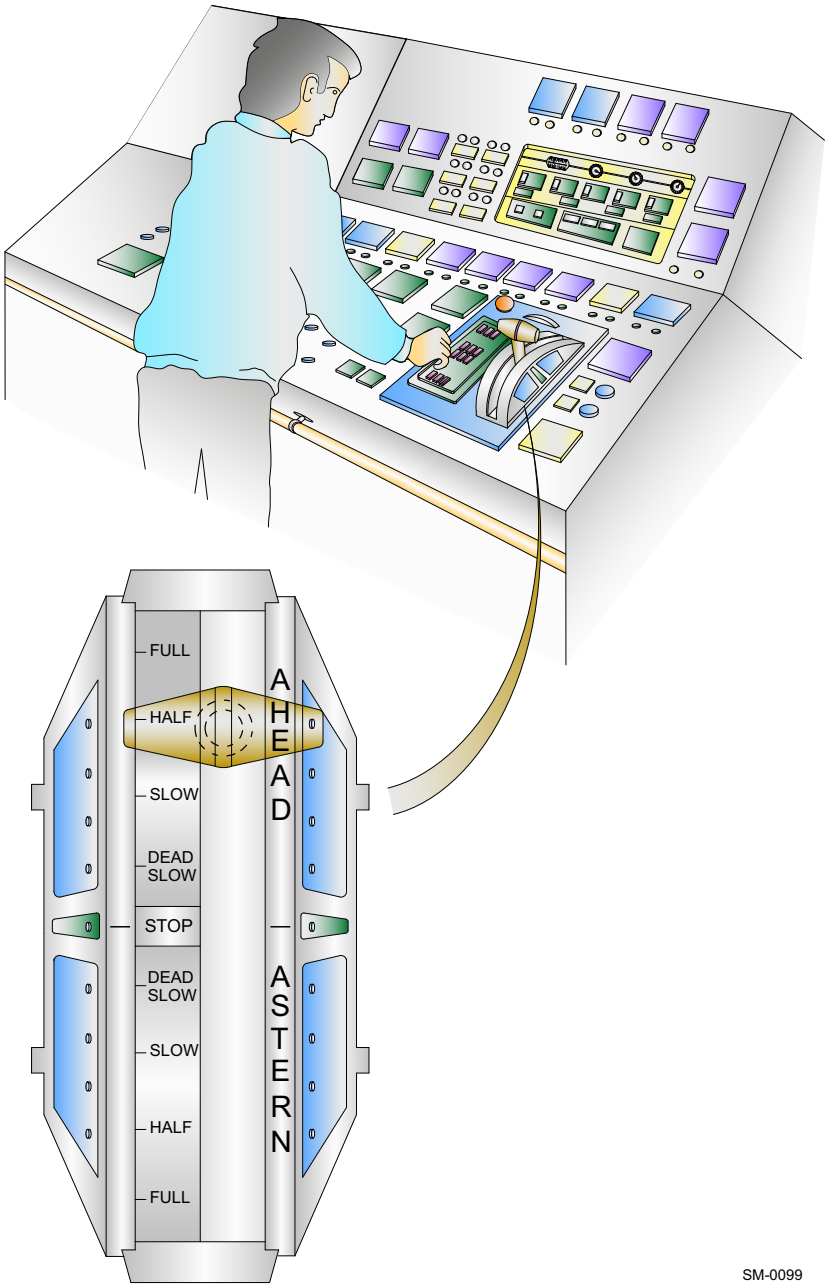

Figure 5-4 Propulsion control

5.4.2 Recommended manoeuvring characteristics

The vessel speed is adjusted by the engine telegraph. Manoeuvring, e.g. for leaving a port, is available from full astern to full ahead. For regular full sea operation, the engine power can be further increased up to 100% Contracted Maximum Continuous Rating (CMCR) power.

To protect the engine, any increase or decrease in power is limited by a rate of change, considering the warm-up respectively cool-down times. Thus, depending on the magnitude of any change in power, it takes time to reach the required engine output (see figures and tables in this section).

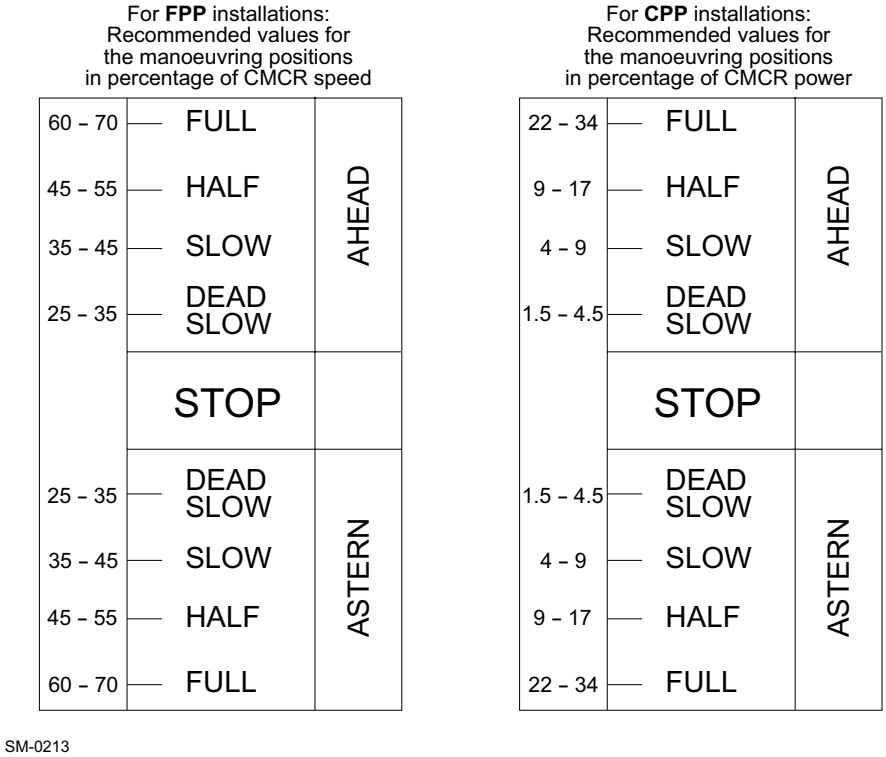

Figure 5-5 Manoeuvring speed/power settings for FPP/CPP installations

For further information on the range of operating modes, see section 1.4 Fuel operating modes, 🗎 1-8.

Fixed Pitch Propeller manoeuvring steps and warm-up times

The recommended manoeuvring steps and warm-up times for engine speed increase are indicated in Table 5-2, 🗎 5-9. The engine speed-up/down program is included in the ECS.

Table 5-2 Recommended manoeuvring steps and warm-up times for FPP

Manoeuvring position	Recommended CMCR speed [%]	Corresponding power [%]	Recommended warm-up time per load step [min]	Min. warm-up time per load step [min]
DEAD SLOW	25–35	1.5–4.5	0	0
SLOW	35–45	4–9	0	0
HALF	45–55	9–17	0.1	0.1
FULL	60–70	22–34	0.5	0.5
FULL SEA 1	92	78	30	23
FULL SEA 2	100	100	40	30

Load reduction is possible in half the time of values in Table 5-2, 🗎 5-9.

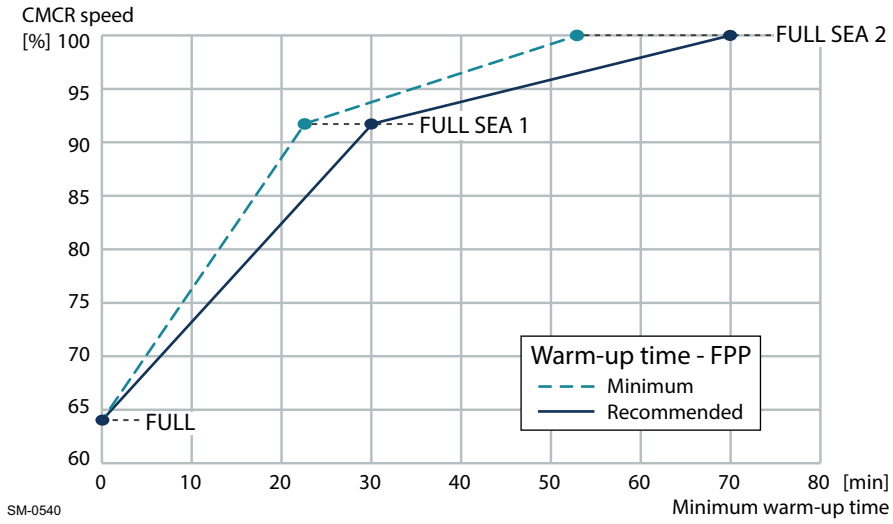

Figure 5-6 Full sea load steps in FPP load-up program

NOTE	After reaching 100% CMCR speed (FULL SEA 2), the speed can be further increased according to the load-up program. This can be carried out until the engine reaches the maximum speed (see the speed limit lines in Figure 2-3, 🗎 2-7), while taking into account the Light Running Margin (see Light Running Margin, 🗎 2-5).

Controllable Pitch Propeller manoeuvring steps and warm-up times

The recommended manoeuvring steps and warm-up times for engine power increase are shown in Table 5-3, 🗎 5-10. The shipyard needs to include the engine power-up/down program in the PCS.

Table 5-3 Recommended manoeuvring steps and warm-up times for CPP

Manoeuvring position	Recommended CMCR power [%]	Recommended warm-up time per load step [min]	Min. warm-up time per load step [min]
DEAD SLOW	1.5–4.5	0	0
SLOW	4–9	0	0
HALF	9–17	0.1	0.1
FULL	22–34	0.5	0.5
FULL SEA 1	78	30	23
FULL SEA 2	100	40	30

Load reduction is possible in half the time of values in Table 5-3, 🗎 5-10.

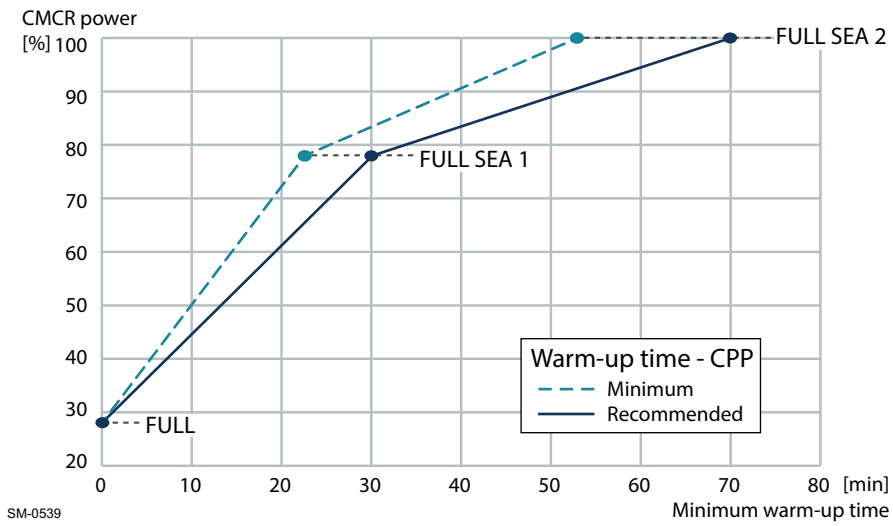

Figure 5-7 Full sea load steps in CPP load-up program

5.5 Alarm and Monitoring System

To monitor common rail system-specific circuits of the engine, sensors with hardwired connections are fitted. In addition to that, the ECS provides alarm values and analogue indications via data bus connection to the ship Alarm and Monitoring System (AMS).

5.5.1 Integrated solution

PCS and AMS from same supplier

- The PCS and AMS are connected to the ECS through one redundant bus line (CANopen or Modbus, depending on an automation maker).
- The integrated solution allows an extended presentation of relevant parameters and easy access to alterable user parameters backed by the graphical user interface functions available in the AMS.
- With the AutoChief 600 AMS by Kongsberg Maritime even the conventional sensors and additional Flex system-specific sensors can be connected via data bus lines, and the data acquisition units can be mounted on the engine in the same boxes used as terminal boxes for any other AMS. These boxes are usually provided by the shipyard and must be delivered to the engine builder for mounting on the engine and connecting to the sensors.
- The integrated solution facilitates commissioning and testing of the alarm signals set on the engine maker's testbed and limits the wiring at the shipyard to a few power cables and bus communication.

5.5.2 Split solution

PCS and AMS from different suppliers

- The PCS is connected to the ECS through two redundant bus lines (CANopen or Modbus, depending on an automation maker).
- For the separate AMS an additional redundant Modbus connection is available.

The requirements for any AMS must be met in a split solution:

- possibility to read values from a redundant Modbus line according to standard Modbus RTU protocol
- ability to display analogue Flex system values (typically 20 values) and to add alarm values provided by the ECS to the standard alarm list (300–800 alarms depending on the engine type and the number of cylinders).

With this solution the human-machine interface is also split:

- The RCS includes the following functions:
  - changing of parameters accessible to the operator
  - displaying the parameters relevant for the engine operation
- The AMS includes the display of:
  - Flex system parameters, such as fuel pressure, servo oil pressure, etc.
  - Flex system alarms provided by the ECS
- WinGD provides Modbus lists specifying the display values and alarm conditions as part of the DENIS specification.

5.6 Alarm sensors and safety functions

To ensure safe operation, the engine is provided with alarm sensors and safety functions.

5.6.1 Signal processing

Signal processing must be performed in the AMS. WinGD provides a separate document "Usual values and safeguard settings" which lists the signal indication values. This includes the alarm function and alarm level with corresponding setting and response time.

The document "Usual values and safeguard settings" is available under the following link: *Usual values and safeguard settings*.

Please note that the signalling time delays given in this document are maximum values. They can be reduced at any time according to operational requirements. When decreasing the values for slowdown times, the delay times for the respective shutdown functions must be adjusted accordingly.

NOTE	The delay values must not be increased without WinGD written consent.

5.6.2 Requirements of WinGD and classification societies

The scope of delivery of alarm and safety sensors must meet the requirements of the respective classification society, WinGD, the shipyard and the owner. For the list of classification societies, see section 9.1 Classification societies, 🗎 9-1.

The alarm sensors and safety functions listed in the document *Usual values and safeguard settings* are mandatory for an unattended machinery space and reflect the minimum requirements of WinGD. For additional requirements from the classification societies, see Table 5-4, 🗎 5-12.

NOTE	In case the engine is configured for attended machinery space, please consult the respective classification society.

Table 5-4 Additional class requirements for alarm sensors and safety functions
Table under preparation

5.7 WinGD Integrated Digital Expert (WiDE)

The WinGD Integrated Digital Expert (WiDE) provides full awareness of the ship operating condition and allows operators to take necessary actions to control and optimise ship operations. The shore connection allows the ship operator to manage and optimise fleet operations.

WiDE constantly collects all engine signals together with ship navigation data making them available both on board and onshore. The engine data is collected and analysed by the engine diagnostic algorithms of WiDE to monitor the engine performance, predict component malfunctions and to support the crew with live troubleshooting and a diagnostic advisory service. WiDE also enhances remote troubleshooting support by WinGD experts.

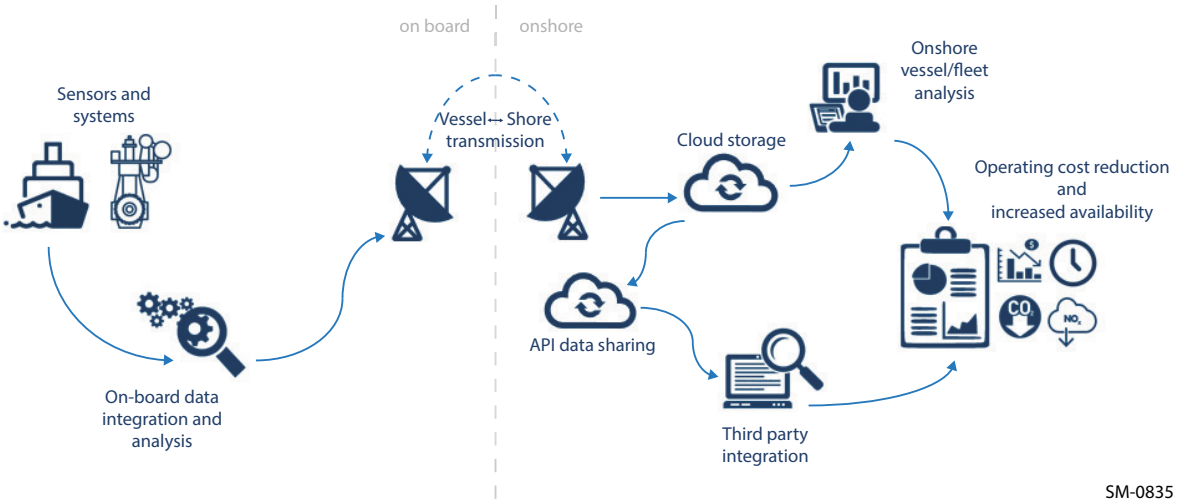

Figure 5-8 WiDE data collection and analysis process

5.7.1 Data collection

WiDE collects engine and other ship data which is stored on board by the WiDE computer, enabling the crew to display and review trends of key engine parameters.

Data collected by WiDE is sent via a secure encrypted communication channel to the WinGD server. The data is made available on two dedicated web portals (eVesselTracker, WiDE online) accessible by a protected user account. WinGD experts review engine data when required, as a first step of remote operation support. The WiDE computer is delivered as standard with the WinGD engines.

5.7.2 Engine diagnostic module

The engine diagnostic module of WiDE analyses the engine data against predefined references in real time, identifying deviations between the measured and reference data. The results are then consolidated and potential issues are highlighted to the crew. Recommendations are provided for corrective actions, allowing operators to improve the engine operation and optimise the engine performance and maintenance planning. Spare parts information is provided to support maintenance.

Analysis

WiDE analyses the engine data to obtain a full diagnostic assessment using several methods:

- The 'digital twin', an engine thermodynamic model which is calibrated at the engine shop test and sea trial, receives and is simulated by real-time engine parameter inputs. This provides an ongoing performance assessment by measuring deviations between the digital twin and the real engine.
- An algorithm rule set, which is based on WinGD expert knowledge, is used to monitor, analyse and diagnose the health of the engine components.
- Data monitoring and collection also enables a progressive performance evaluation and improvement.

Prediction and troubleshooting

The real time engine analysis performed by WiDE provides an early anomaly detection warning. If a potential fault is diagnosed, the operator is notified, enabling them to decide on immediate action. The WiDE troubleshooting process is described in the following sequence:

- Initial proposed actions follow the directions of the engine operation manual.
- If required, WiDE enables connection to WinGD experts for technical support and remote troubleshooting.
- WiDE also creates relevant reports for future reference.

Support

In addition, WiDE maintains a record of events on the main engine and has a module to support planned maintenance. Spare parts required for maintenance tasks can be listed. This checks the available stock level and provides orders accordingly.

Software availability

WinGD provides the WiDE engine diagnostic software on a 'Software-as-a-Service' basis. The software license is provided as part of an annual subscription plan that includes other services, such as troubleshooting support, performance reports and recommendations from WinGD experts.

For more information regarding subscription plans and services offered by WinGD, please contact WinGD representative or visit WinGD web page using the following link: *WiDE*.

5.7.3 WiDE installation process

Figure 5-9, 🗎 5-14 shows the installation steps of WiDE. The WiDE computer is installed before the shop test as the data it collects provides the information required for the engine digital twin. The process ensures that the WiDE system is fully operational by the time of the vessel's maiden voyage.

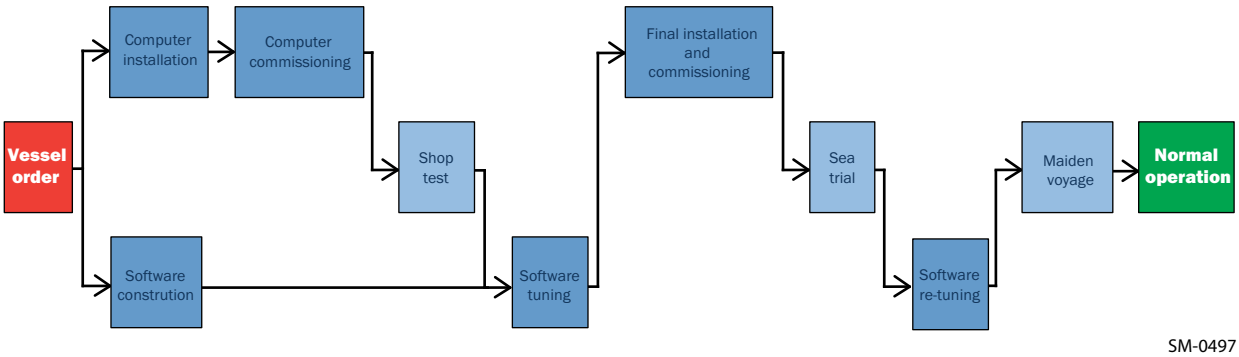

Figure 5-9 WiDE installation process

5.8 Intelligent Combustion Control

The Intelligent Combustion Control (ICC) is a set of automatic cylinder pressure control functions in the ECS, which enables safe and reliable engine operation according to original shop test performance. The ICC functions stabilise and optimise the fuel combustion process for all engine operation modes to achieve the required engine power and fuel consumption within emissions limits.

5.8.1 ICC control functions

The ICC consists of three functions to control cylinder pressure. In all cases, the range by which the system can offset the control parameter is limited to meet emissions requirements and to prevent engine damage.

Compression balancing

The ECS automatically calculates and adjusts the cylinder compression pressure via a unique exhaust valve closing angle offset for each cylinder. This achieves consistent compression pressure across all engine cylinders.

Firing balancing

In diesel mode, the ECS automatically adjusts cylinder firing pressures to be consistent across all cylinders by varying the injection begin angle by a unique offset for each cylinder.

In methanol mode, the ECS control function is under evaluation.

Firing control

In diesel mode, the ECS automatically offsets injection begin angles so that firing pressures match testbed values. The offset is the same for all engine cylinders.

In methanol mode, this feature is under evaluation.

5.8.2 ICC activation modes

During normal operation it is recommended to keep all available control options ON. In some circumstances it can be helpful to turn individual modes OFF, such as:

- problems with a cylinder unit (e.g. fuel injection, exhaust valve or ECS issues)
- loss, damage or drift of two or more cylinder pressure sensors
- extreme weather conditions which can lead to unstable control
- running-in or recovery of the cylinder liner
- during troubleshooting.

In case of a single damaged cylinder sensor, the ICC controls are only deactivated on the unit where the sensor failed.

5.8.3 ICC data

Cylinder pressure sensors installed on each cylinder provide the ICC with real-time measurement data which is used to supply the information enlisted in this section.

Compression pressure

Direct measurement of the compression pressure of each cylinder is not possible. For this reason, the individual compression pressure is calculated based on the measured cylinder pressure during the compression phase of each cylinder. Compression pressure is processed during each cycle and over the full engine power range. An average value of compression pressures for all units is also calculated.

Firing pressure

Peak firing pressure is directly measured for each cylinder. An average value of all firing pressures is also calculated.

Firing pressure angle

The crankshaft angle of the peak firing pressure is measured for each cylinder. An average value for all cylinders is also calculated.

ISO corrected firing pressure

ISO corrected firing pressure is calculated at all engine loads based on the IMO technical file (see Figure 5-10, 🗎 5-16). These pressures are dependent on the engine tuning and require additional ISO correction sensors:

- two scavenge air temperature sensors after the Scavenge Air Cooler (SAC) which provide actual scavenge air temperatures
- two barometric pressure sensors next to the turbocharger (or between the turbochargers in case of multiple turbochargers) which provide the ambient air pressure
- two air temperature sensors next to the turbocharger (or between the turbochargers in case of multiple turbochargers) which provide the ambient air temperature.

This ISO correction is only applied in diesel mode with firing control.

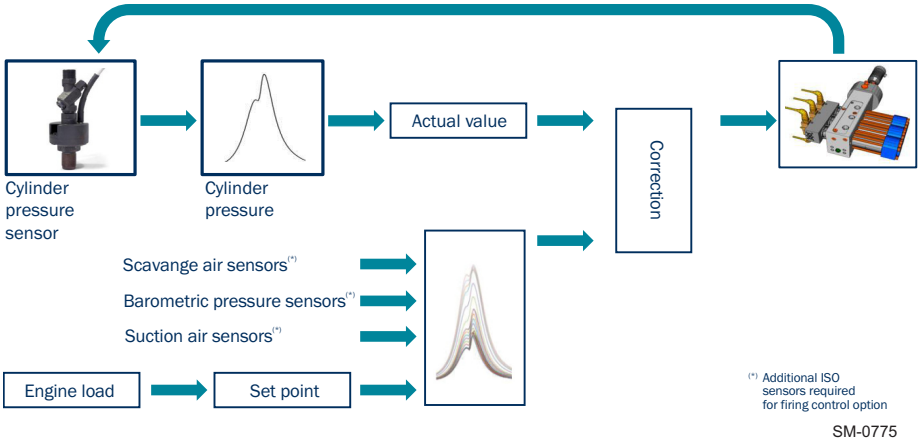

Figure 5-10 Intelligent Combustion Control system

6 Engine Dynamics

It is critical that vibration is minimised throughout the design and construction stage of any engine installations. The assessment and reduction of vibration are subject to continuous development and research, requiring expert knowledge. For successful design, vibration behaviour calculations are required over the whole operating range of the engine and the propulsion system. Thus, WinGD has developed extensive computer software, analytical procedures and measuring techniques.

NOTE	WinGD provides additional support services to assist with system dynamics and vibration analysis. For further information, see section 6.9 Order forms for vibration calculation and simulation, 6-27.

Forces and moments causing vibrations

Within the engine, various forces and moments are generated by the reciprocating and rotating masses. Often these cyclical forces and moments are neutralised by counterbalancing within the engine. However, if it is not achieved, the engine experiences the sum of these forces and moment as external responses, reacting around its own axis and causing vibrations outside the engine. Vibrations are problematic, especially if a vibration frequency causes a resonance which leads to amplitude passing acceptable limits. This section highlights the importance of dynamic consideration, the causes and relevance.

After considering the external forces and moments types, this section explores the resulting vibration, along with recommended considerations and countermeasures relevant to the engine type and other associated systems and design features.

Types of vibration

The following vibration types are considered in this section:

- external mass forces and moments
- external lateral forces and moments (lateral engine vibration or 'rocking')
- longitudinal engine vibration
- torsional vibration of the shafting
- axial vibration of the shafting
- whirling vibration of the shafting
- hull vibration.

Dynamic characteristics data

The external forces and moments generated by a specific engine defines its dynamic characteristics. These must be considered throughout the vessel design process to avoid adverse impact on the vessel.

The latest version of the document “External forces and moments” with a complete list of the external forces and moments for each engine type is available on WinGD web page: *External forces and moments*.

The external forces and moments for engines not tuned to an R1 rating are available on request.

6.1 External mass forces and moments

The external mass forces and moments are the resulting forces and moments produced by reciprocating and rotating masses of the running gear (i.e. the engine main oscillating masses) that are transmitted to the surrounding vessel via the foundation. Thus, this does not consider forces and moments that are produced by combustion forces (see section 6.2 External lateral forces and moments, 🗎 6-7). The external mass forces and moments depend on the design of a specific engine and the engine speed. The engine power has no influence on the external mass forces and moments.

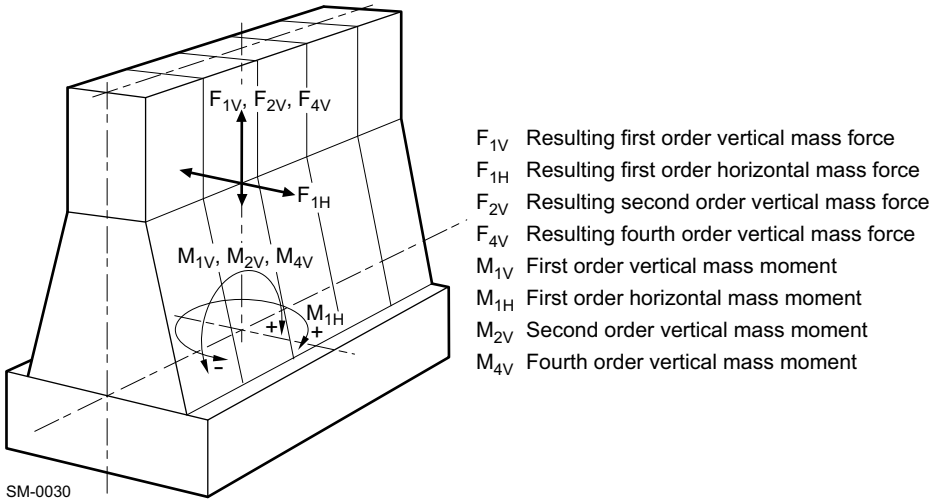

Figure 6-1 External mass forces and moments

Figure 6-1, 🗎 6-2 shows the mass forces and moments generated by the engine. However, where possible they are neutralised. If not, cyclical generation of the external mass forces and moments can lead to unwanted and disturbing vibrations throughout the vessel. This highlights the importance of using countermeasures that balance out the generated mass forces and moments where possible.

6.1.1 Balancing of mass forces and moments

Forces

With a regular firing order of evenly distributed crank angles, an engine inherently balances the summation of all vertical (F_V) and horizontal (F_H) free forces. Sometimes the firing order is designed to be irregular, i.e. unevenly distributed crank angles, to optimise the overall vibration characteristic of a specific engine type. Regardless, the resulting mass forces are considered to be negligible.

First order moments

Standard counterweights fitted to the ends of the crankshaft can reduce first order mass moments (M_{1V} and M_{1H}) to acceptable levels. In special cases non-standard counterweights can be used to reduce either vertical (M_{1V}) or horizontal (M_{1H}) first order mass moments as required.

Second and fourth order moments

Second (M_{2V}) and fourth (M_{4V}) order vertical mass moments are also generated, although these magnitudes vary depending on engine type and number of cylinders. Unless a problematic vessel design leads to unfavourable vibration, there is normally no cause for concern for engines with 7 cylinders or more. However, 5- and 6-cylinder engines are known to generate high magnitudes of unbalanced second order vertical mass moments (M_{2V}) and, thus, must be carefully considered. Consequently, for 5- and 6-cylinder engines WinGD strongly recommends that the impact of the second order vertical mass moment on the vessel is carefully checked. In case a possible problem is revealed, WinGD recommends to consider the installation of one of the following countermeasures designed to reduce the effects of second order vertical mass moments to acceptable values.

6.1.2 Countermeasures for second order vertical mass moments

WinGD strongly recommends to use either of the following countermeasures for 5- and 6-cylinder engines:

- engine-fitted ELectric BAlancer(s) (iELBA)
- electrically-driven compensator fitted to the ship structure.

These countermeasures should also be considered for other cylinder number engines if the second order vertical mass moments (M_{2V}) surpass the necessary limits. However, suitability varies for different engines and vessel design, as well as the status of the project, i.e. still in design phase or retrofitting.

Second-order excitations of the engine are not harmful to the engine but can cause problems if they excite ship hull girder vibrations. Hull vibration analyses must be done to judge whether second order balancing (iELBA or external) is required. The shipyard is responsible for these analyses. The installation of iELBAs by default, without proper vibration analyses, is a safe solution only if two iELBAs are installed on the engine. The installation of a single free end iELBA must be made on the basis of a detailed shipyard analysis.

NOTE	While the installation of two iELBAs is a safe solution, the lack of appropriate analyses can lead to adverse effects if a single iELBA is installed. The shipyard is responsible for these analyses during the vessel design phase.

For additional details on second order moment balancing, please refer to the *2nd-order ship hull vibrations and balancing*.

Integrated ELectrical BAlancer (iELBA)

The iELBA is structurally integrated into the engine and is installed on the free end and/or the driving end. The iELBA is comprised of two shafts with counterweights connected with gear wheels and driven by one electric motor. A frequency converter controls the speed of the electric motor. This frequency converter and the control system are installed in an electrical cabinet in the control room. Alternatively, these items can be installed in the engine room.

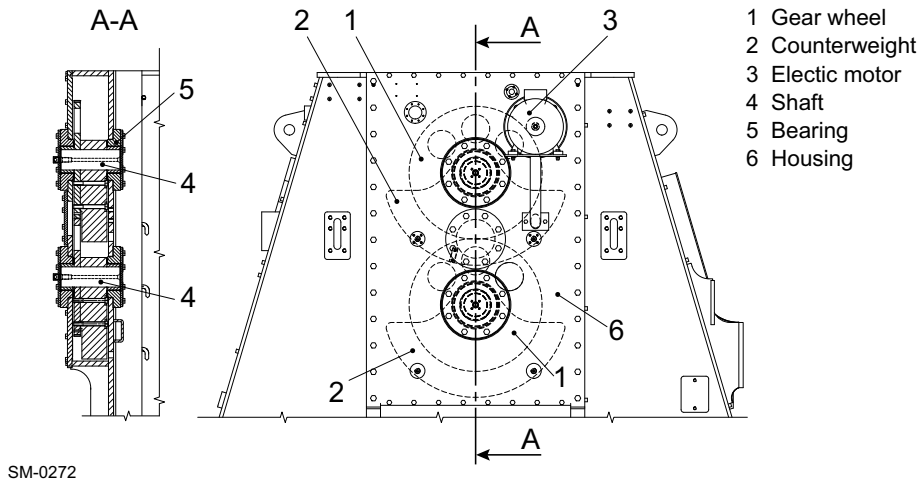

Figure 6-2 Major components and details of the iELBA

For the use of only a single iELBA, the mode shapes of the vertical hull girder vibrations must be considered. If the mode shapes of the vertical hull girder vibrations are unknown, the application of only one iELBA can be ineffective and / or counterproductive. The shipyard is responsible for the calculation of the vertical hull girder frequencies and the corresponding mode shapes, and, consequently, for the decision on the number of iELBA systems to be installed.

NOTE	The iELBA system cannot be retrofitted to the engine. The iELBA must be ordered, designed and implemented on the engine before manufacturing commences.

Electrically-driven compensator (external compensator)

Alternatively, or if the ship vibration pattern is not known at an early stage, an electrically-driven compensator can be installed or retrofitted if disturbing second order vibrations occur. As shown in Figure 6-3, 🗎 6-5, such a compensator is usually installed in the steering gear compartment. It is tuned to the engine operating speed and controlled accordingly.

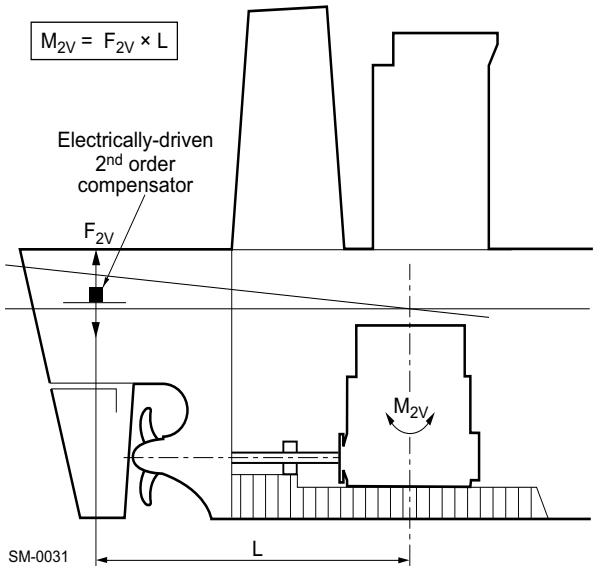

Figure 6-3 Location of an electrically-driven compensator

Power Related Unbalance

The Power Related Unbalance (PRU) values can be used to estimate the risk of unacceptable levels of hull vibrations caused by external mass moments of first and second order. The PRU is calculated with the following formula:

$$PRU = \frac{M_x\,(Nm)}{Engine\ Power\,(kW)}$$

Formula 6-1 Power related unbalance calculation

where:

PRU ..... = power related unbalance

M_x ..... = M_{2V} (typically), M_{1H} & M_{1V} (considered as well)

The M_x and the resulting PRU values of an engine are dependent on the number of cylinders.

For further information on the resulting PRU values and likelihood of needing a compensator, please refer to the following document: *External forces and moments.*

The link provides dynamic characteristics data for engines tuned at R1 rating. For other engine speeds, the corresponding external mass moments are calculated with the following formula:

$$M_{x(CMCR)} = M_{x(R1)} \cdot \left(\frac{n_{CMCR}}{n_{R1}}\right)^2$$

Formula 6-2 External mass moments calculation for R_x rating

where:

$M_{x(CMCR)}$ .... = resulting moments for a specific engine CMCR

$M_{x(R1)}$ ..... = moments for engine at R1 rating

n_{CMCR} ..... = speed of engine for a specific engine CMCR

n_{R1} ..... = speed of engine at R1 rating

6.2 External lateral forces and moments

The external lateral forces and moments (lateral engine vibrations resulting in 'rocking') are generated by the combustion process and, to a small extent, by the reciprocating masses of the running gear. The lateral forces depend on the Contracted Maximum Continuous Rating (CMCR) and the engine speed.

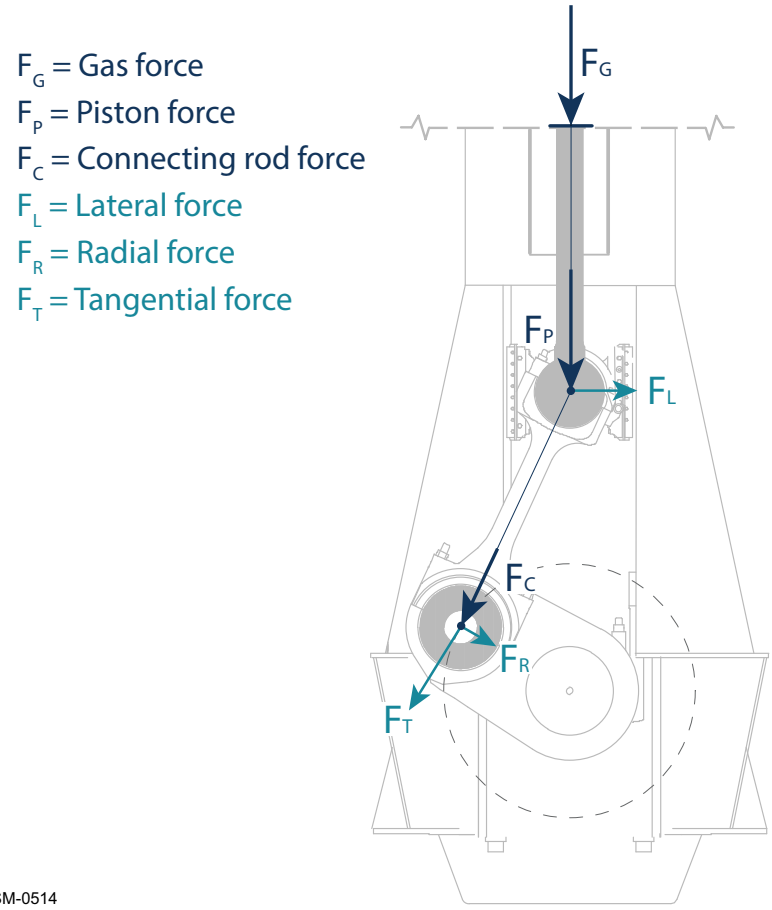

Figure 6-4 Forces through the engine

The forces between the piston and the connecting rod reaction cause a lateral force to act on the crosshead guide rails. The lateral forces at the guide rails are transmitted to the engine block and to the foundation.

The resulting lateral forces and moments can excite resonances of the combined engine and foundation system. In addition, hull resonances or local vibrations in the engine room can be generated.

6.2.1 Lateral vibration types

The resulting lateral forces and moments generate two different modes of lateral engine vibration, the H-type and X-type vibration, as shown in Figure 6-5, 🗎 6-8.

The table of H-type and X-type vibration values is also provided under the following link: *External forces and moments*.

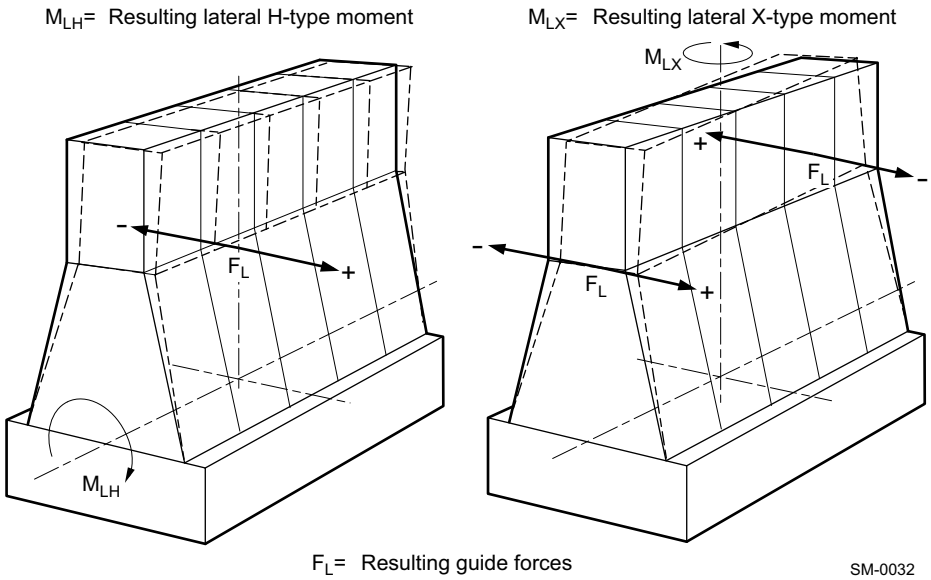

Figure 6-5 Lateral vibration: X-type and H-type

H-type vibration

H-type lateral vibrations are characterised by a mode shape where both sides of the top of the engine, the driving and free ends, vibrate together, in phase. The lateral guide forces (F_L) result in a lateral moment, expressed as resulting lateral H-type moment (M_{LH}).

X-type vibration

X-type lateral vibrations are characterised by a mode shape where at the top of the engine, the driving and free ends vibrate in counter-phase to each other. As these resulting lateral guide forces create opposing axial moments at the two ends of the engine, the X-type lateral vibrations are expressed as a moment around the vertical axis, the resulting lateral X-type moment (M_{LX}).

6.2.2 Reduction of lateral vibration

The amplitudes of the vibrations transmitted to the hull depend on the design of the engine seating, frame stiffness and exhaust pipe connections. As the amplitude of the vibrations cannot be predicted with absolute accuracy, the support to the ship structure and the space required to install the stays must be considered in the early design stages of the engine room structure. This is true for both lateral and longitudinal vibrations, which are further discussed along with relative reduction methods in the following subsections.

NOTE	WinGD recommends a stiff engine foundation design in the longitudinal and lateral directions, as this is always best practice in minimising hull vibrations.

Lateral stays

If required, lateral stays (i.e. stays in the lateral direction) must be fitted between the upper engine platform and the ship hull to prevent harmful resonance conditions. The main function of lateral stays is to shift the resonance frequency sufficiently above nominal speed, as shown in Figure 6-6, 🗎 6-9.

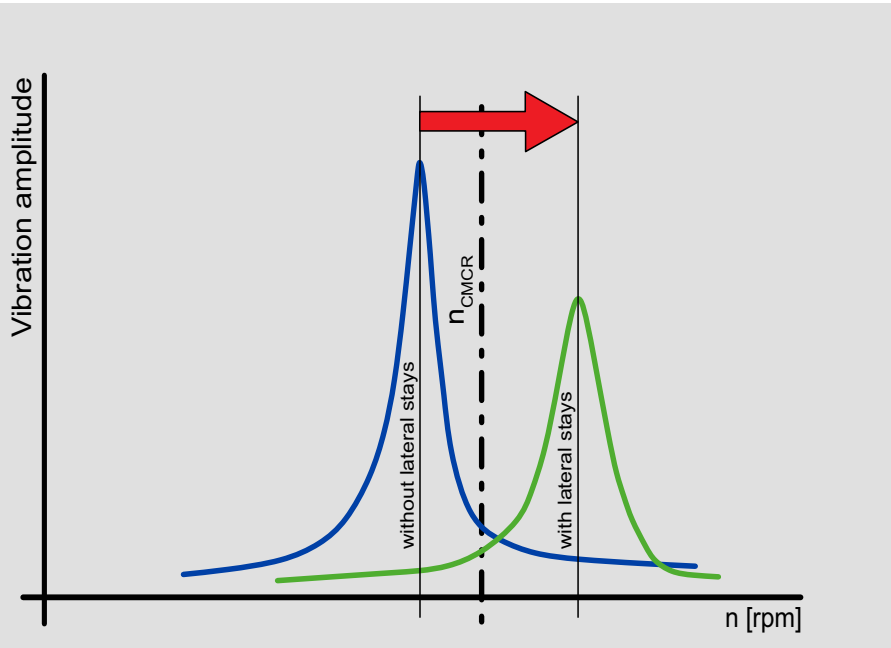

SM-0794

Figure 6-6 Lateral stays shifting the resonance frequency above nominal speed

NOTE	If lateral stays are required, WinGD requests installation of hydraulic type stays. These are available from third-party suppliers.

In addition, if hydraulic type stays are installed, as requested by WinGD, then a damping effect is provided by these stays.

Such hydraulic type stays can be either for both-side or one-side installation:

- Hydraulic type stays for one-side installation have two oil chambers (one on each side of the piston) and provide a 'damping effect' in both directions.
- Hydraulic type stays for both-side installation have an oil chamber on one side of the piston and an air chamber on the other side. The air chamber provides little to no damping effect.

The two general arrangements for both stay types are shown below in Figure 6-7, 🗎 6-10 and Figure 6-8, 🗎 6-10.

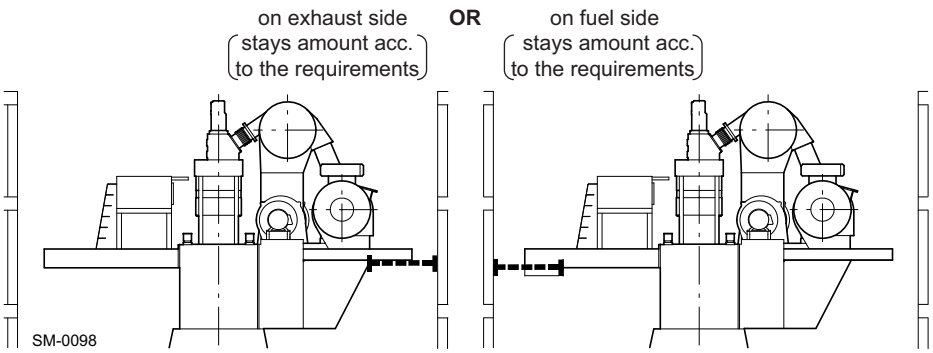

Figure 6-7 General arrangement of hydraulic type stays for one-side installation

NOTE	The selected hydraulic type stays must be suitable for one-side installation on the engine. The suitability of one-side installation must be confirmed by the hydraulic type stay supplier.

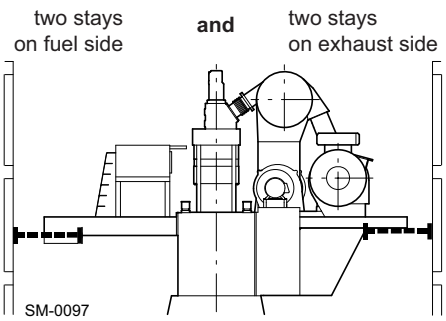

Figure 6-8 General arrangement of hydraulic type stays for both-side installation

Determining the minimum number of required lateral stays

On a scientific basis, the only way to determine the minimum number of required lateral stays (i.e. stays in the lateral direction) is by finite element calculation. This calculation takes into account the exact mass and stiffness properties of the foundation, as well as the aft section of the ship. This dynamic finite element investigation must be executed by the shipyard or a design institute. WinGD does not have these ship hull properties available to perform this extensive investigation.

However, based on broad experience with different bore sizes, cylinder numbers, and engine ratings, WinGD provides an alternative approach to determining the minimum number of required lateral stays. WinGD provides the magnitude of the lateral forces and moments resulting from the engine operation at R1 (as shown in *External forces and moments*). Project-specific values are available upon request. The magnitude of the lateral forces and moments is key for determining the minimum number of required lateral stays. Based on individual experience, engine builders and shipyards are free to select a different number of lateral stays.

From the project-specific external forces and moments, the values to consider are the lateral H-type moment (M_{LH}) and the lateral X-type moment (M_{LX}) which, without stays, have a resonance with inadmissible amplitude in the speed range of 70%–110% of CMCR speed (n_{CMCR}).

Although there can be engines with high lateral excitations displayed on paper, these high values can be not relevant due to a missing resonance condition, and thus, no stays are required. For example, most of 7-cylinder engines do not require any lateral stays. This is mainly due to the strong M_{LX} Ord.4 resonance which is located sufficiently above the CMCR speed (n_{CMCR}) and the strong M_{LH} Ord.7 resonance which is located at low speed.

On the other hand, based on experience, most 8-cylinder engines are known to have a very strong M_{LX} Ord.5 resonance which is located close to the CMCR speed (n_{CMCR}), and, thus, lateral stays are mandatory. The same is applicable for 9-cylinder engines that also have a very strong M_{LX} Ord.6 resonance which is located slightly above the CMCR speed (n_{CMCR}).

On twin-engine installations, the lateral stays must be attached on the outboard side of the engines towards the ship hull. Depending on whether the engine is a standard or a left engine (see Figure 6-9, 🗎 6-12 and Figure 6-10, 🗎 6-12), the outboard side can be on the fuel side or the exhaust side.

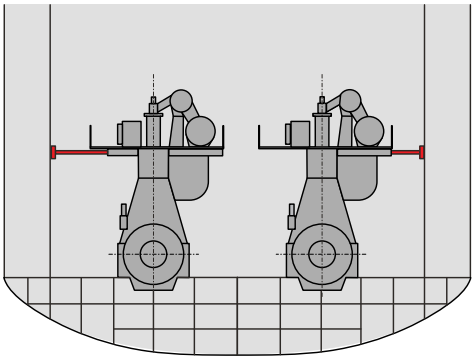

Installation of lateral stays on the fuel and exhaust side with:
Two STANDARD engines

SM-0795

Figure 6-9 Twin-engine installations with two standard engines

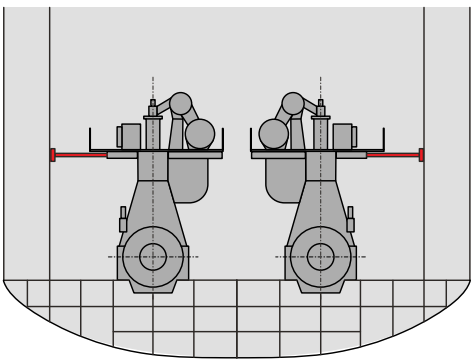

Installation of lateral stays on the fuel side with:
A STANDARD engine on the port side and
a LEFT engine on the starboard side

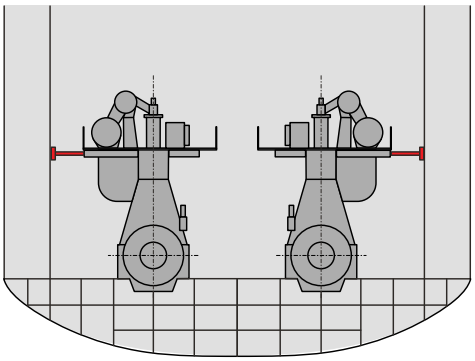

Installation of lateral stays on the exhaust side with:
A LEFT engine on the port side and
a STANDARD engine on the starboard side

SM-0796

Figure 6-10 Variants of twin-engine installations with a standard and a left engine

As shown in Figure 6-11, 🗎 6-13, Figure 6-12, 🗎 6-13, and Figure 6-13, 🗎 6-14, WinGD recommends a specific number of lateral hydraulic type stays for installation on:

- engine exhaust side or
- engine fuel side or
- both engine sides.

As the project-specific design of the ship hull and the engine foundation can vary in some cases, a different number of hydraulic type stays can be required. The final number of required lateral stays must be specified by the shipyard (e.g. based on experience or on sea trial test results).

No. of cyl.	Available attachment points on the platform of the engine exhaust side	Recommended no. of stays
5	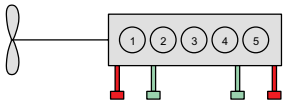	Recommended: 2 Optional: +2
6	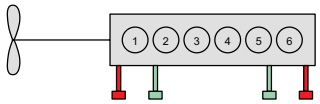	Recommended: 2 Optional: +2
7	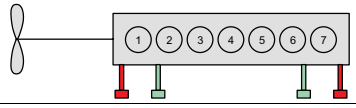	Recommended: 2* Optional: +2 * Usually no stays are required for 7 cyl.
8	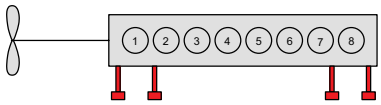	Recommended: 4 Optional: -

SM-0785

Figure 6-11 Engine stays arrangement on the exhaust side

No. of cyl.	Available attachment points on the platform of the engine fuel side	Recommended no. of stays
5	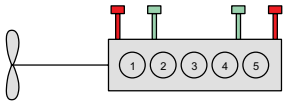	Recommended: 2 Optional: +2
6	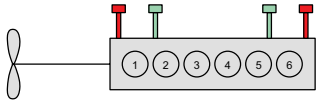	Recommended: 2 Optional: +2
7	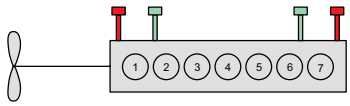	Recommended: 2* Optional: +2 * Usually no stays are required for 7 cyl.
8	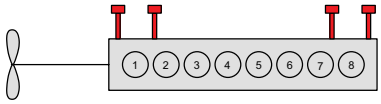	Recommended: 4 Optional: -

SM-0786

Figure 6-12 Engine stays arrangement on the engine fuel side

No. of cyl.	Available attachment points on the platform of the engine fuel and exhaust sides	Recommended no. of stays
5	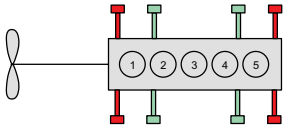	Recommended: 4 Optional: +4
6	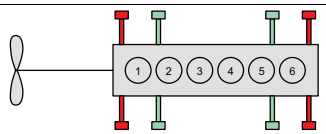	Recommended: 4 Optional: +4
7	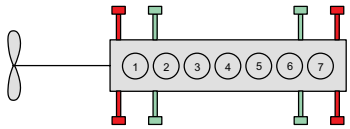	Recommended: 4* Optional: +4 * Usually no stays are required for 7 cyl.
8	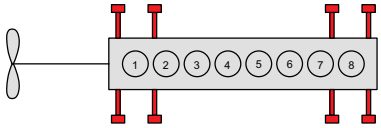	Recommended: 8 Optional: -

SM-0787

Figure 6-13 Engine stays arrangement on both engine sides

Electrically-driven compensator(s)

If lateral stays cannot be installed, electrically-driven compensators are available to reduce lateral engine vibrations:

- H-type vibration:
  - One electrically-driven compensator can be installed in the longitudinal centre point of the engine
  - Two phase-synchronised electrically-driven compensators can be applied, one at each end of the engine
- X-type vibration:
  - Two counterphase-synchronised electrically-driven compensators are necessary, one at each end of the engine.

NOTE	Project-specific engine reinforcements must be approved by WinGD prior to installation.

NOTE	Electrically-driven compensators can only compensate one harmonic excitation frequency at a time.

6.3 Longitudinal vibration (pitching)

Strong axial vibrations in the shafting, transmitted from the thrust bearing to the engine structure and foundation, can excite inadmissible longitudinal vibrations at the engine top and, consequently, in the superstructure (see section 6.5 Axial vibration, 🗎 6-20). In any case, to prevent such vibrations, the double-bottom structure must be as stiff as possible in the longitudinal direction.

Reduction of longitudinal vibration (5-cylinder engines)

In general, longitudinal stays are only especially needed on 5-cylinder engines when a shafting layout has a main torsional critical speed above the nominal speed, resulting in strong longitudinal engine vibrations at the top of the engine block. This tends to occur only when intermediate shafts with oversized diameters are used, which is no longer common today.

Longitudinal stays to prevent vibration in superstructure

There can be installations where it might be beneficial to install longitudinal stays. This is not because of inadmissible longitudinal vibrations at the engine top, but because of possible disturbing longitudinal vibrations in the superstructure, close to nominal speed. By fitting longitudinal stays the disturbing resonance can be shifted above nominal speed.

The decision of whether longitudinal stays are required or not must be made by the shipyard based on a global ship vibration investigation, or on vibration measurements taken at the top of the engine block and in the superstructure (on the first vessel of a series). They are arranged as shown in Figure 6-14, 🗎 6-15.

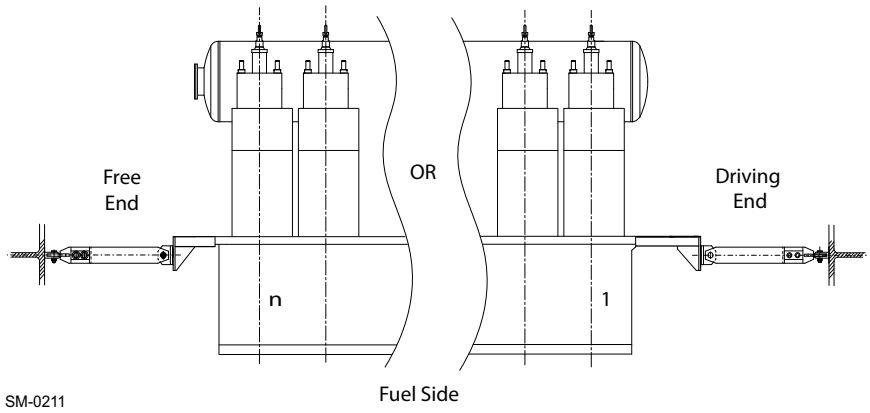

Figure 6-14 Arrangement of longitudinal stays

NOTE	If longitudinal stays are required, WinGD recommends to install friction type stays according to the WinGD design or, alternatively, hydraulic type stays from third-party suppliers.

Friction type stays

Friction type stays can be installed according to the WinGD design, on either the engine free end or the driving end side. The layout of the WinGD friction type stays (please refer to the drawing "DG 9715 Engine Stays" in the *MIDS* for the application of longitudinal stays) must conform with the specifications. Deviations are not acceptable, especially the friction coefficient of the shim and the disc spring properties which must follow exact specifications.

For the assembly of friction type stays, please refer to the latest version of "DG9715 Engine Stays – Assembly Instructions" for the WinGD friction type stays on WinGD web page: *Assembly instruction – Friction type stays*.

The layout of friction type stays are shown in the drawing "DG 9715 Engine Stays" in the *MIDS*.

Hydraulic type stays

Hydraulic type stays can be installed on either the engine free end or driving end side according to third-party suppliers.

6.4 Torsional vibration

Torsional vibrations are generated by gas and inertia forces as well as by the irregularity of the propeller torque. It does not cause hull vibration (except in very rare cases) and is not perceptible in service, but produces additional dynamic stresses in the shafting system.

The shafting system comprises of the crankshaft, propulsion shafting, propeller, engine running gear, flexible couplings and Power Take-Off (PTO). The complete assembly of the shafting system must be considered when determining the torsional loads in the system components.

Torsional Vibration Calculation

The torsional loads in the system components are determined by performing a Torsional Vibration Calculation (TVC). The TVC must be done in the early stage for every project.

Across the engine speed range, all system components must remain within their corresponding torsional vibration load limits. If in a component the torsional loads exceed the corresponding limit, appropriate countermeasures must be applied.

The calculation normally requires approval by the relevant classification society and can require verification by measurement on board ship during sea trials. All data required for torsional vibration calculations should be made available to the engine supplier in an early design stage (see section 6.9 Order forms for vibration calculation and simulation, 🗎 6-27).

Barred Speed Range

At a certain speed range the torsional vibration stresses in the shafting can exceed the limits for continuous operation. If this occurs, a Barred Speed Range (BSR) must be defined. The width of the BSR is defined by the classification society. The BSR must be passed through rapidly and some classification societies have defined rules about the maximum permissible passage time through the BSR. In general, the target is to have a maximum passage time of 30 seconds.

In order to guarantee a rapid passage of the BSR, a minimum power margin of 10% at the upper boundary of the BSR must be present. The power margin is defined as the margin between the bollard pull curve and the engine torque limit. In any case, within the BSR the torsional shaft stress must not exceed the transient limit. Otherwise, other appropriate countermeasures must be taken.

6.4.1 Reduction of torsional vibration

Excessive torsional vibration can be reduced by optimising the shaft diameters, selecting a different (heavier) flywheel, adding a front disc (tuning wheel) to the free end of the crankshaft or adding a torsional vibration damper to the free end of the crankshaft. A torsional vibration damper reduces the torsional stresses by absorbing part of the vibration energy.

Low-energy vibrations

Viscous damper

Where low-energy torsional vibrations must be reduced, a viscous damper can be installed (see Figure 6-15, 🗎 6-19). In some cases, the TVC shows that an additional oil-spray cooling for the viscous damper is needed. In such cases the layout must be in accordance with the recommendations of the damper manufacturer and WinGD design department. The viscosity of the silicone oil in the viscous damper must be checked periodically. The interval is specified by the damper manufacturer. For more information, refer to the Operation Manual.

High-energy vibrations

For high-energy torsional vibrations that can occur e.g. on 5- and 6-cylinder engines, a spring type damper with its damping effect can be considered (see Figure 6-15, 🗎 6-19).

Spring damper

The spring damper must be supplied with oil from the engine Lubricating Oil (LO) system. Depending on the torsional vibration energy to be absorbed, the damper can dissipate up to 120 kW of energy (based on the number of cylinders).

Depending on the installed spring damper, the initial estimated oil flow to the spring damper is approximately 25 m^3/h. However, project-specific oil flow must be provided by the spring damper designer. This project-specific oil flow must be based on the final TVC results.

NOTE	For Geislinger spring dampers, the initial estimated oil flow to the spring damper as well as the project-specific oil flow are provided with a tolerance of ±50%.

In case of uncertainty with regards to the oil flow, WinGD recommends installing the main LO pumps with a higher flow capacity margin. The arrangement of the LO system (see Figure 4-8, 🗎 4-16) enables return of excessive oil supply to the LO drain tank. This is achieved through a pressure retaining valve.

NOTE	For spring damper installation, the application of a damper monitoring system is mandatory.

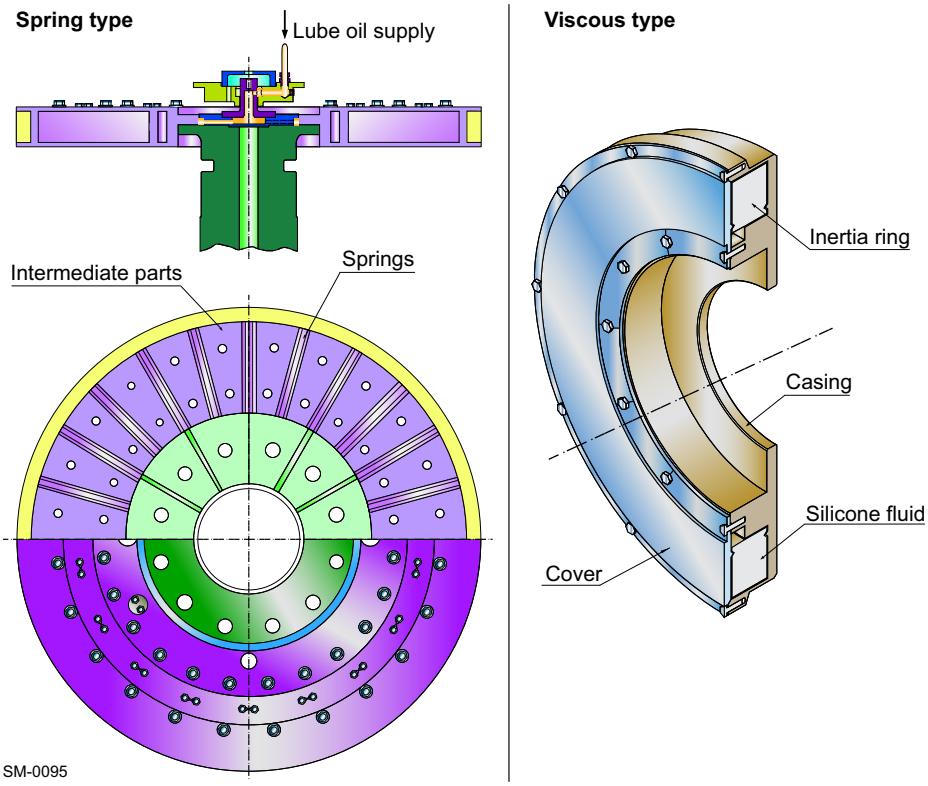

Figure 6-15 Vibration dampers (spring type and viscous type)

6.4.2 PTO/PTI systems effect on torsional vibration

A propulsion plant can include a main-engine driven generator (Power Take-Off (PTO)), a shaft-line connected electric motor (Power Take-In (PTI)), or both. These elements are connected to the engine or shafting by clutches, gears, shafts and/or elastic couplings (see Figure 4-30, 🗎 4-71 for different arrangements).

Installations with PTO or PTI require special attention in the early stages of a project. These systems can cause torsional vibrations and alignment challenges.

Risk of unstable engine speed

For many PTO / PTI systems that use elastic couplings, the lowest torsional natural frequency can be problematic if it is below approximately 1.5 Hz. In such a case there is a risk of engine speed instability where the engine constantly adjusts its speed to compensate the rotating vibration. This must be considered and compensated for in the engine speed control system.

Installation of Misfiring Detection device

Such PTO / PTI systems are very sensitive to misfiring because varying firing loads can cause inadmissible torsional vibrations. To protect the elastic couplings and gears from any misfiring, a Misfiring Detection device (MFD) must be installed. This indicates either partial or total misfiring, allowing for appropriate countermeasures (e.g. speed reduction, de-clutching of PTO / PTI branch) to be applied automatically, protecting the PTO / PTI components.

For additional information on PTO / PTI application, see section 4.10 PTO, PTI, PTH and primary generator applications, 🗎 4-70. For support regarding the system layout, please contact WinGD.

6.5 Axial vibration

The axial vibrations mainly depend on the dynamical axial system of the crankshaft, the mass of the torsional vibration damper, and any free-end installations or flywheel fitted to the crankshaft. Additionally, axial vibrations can be considerably influenced by torsional vibrations. This influence is called *coupling effect*.

It is recommended to carry out axial vibration calculations at the same time as TVCs. To consider the coupling effect of torsional vibrations on axial vibrations, it is necessary to apply a suitable coupled axial vibration calculation method.

As the shafting system is made up of masses and elastic connections, it is capable of vibrating and resonating at several frequencies. This would result in excessive stress in the crankshaft and in some cases can lead to excessive vibration of the upper part of the engine.

Reduction of axial vibration

Axial vibration damper

To limit the influence of axial excitations and reduce the level of vibration, all present WinGD engines are equipped with an integrated axial vibration damper. In most cases this lowers the axial vibrations in the crankshaft to acceptable values, thus, no further countermeasures are required. No excessive axial vibrations occur, either in the crankshaft, or in the upper part of the engine.

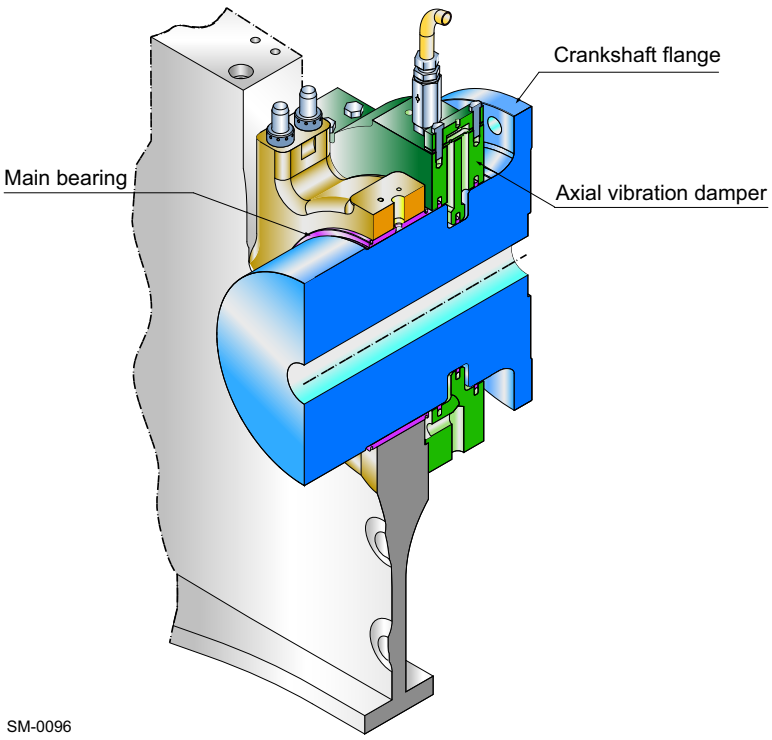

Figure 6-16 Example of axial vibration damper

The integrated axial vibration damper is mounted at the free end of the crankshaft. It is connected to the main LO circuit. An integrated oil pressure monitoring system continuously checks the correct operation of the axial vibration damper.

6.6 Whirling vibration

Whirling vibrations are generated when the shaft rotates and goes into transverse oscillations. If the shaft is out of balance, the resulting centrifugal forces induces the shaft to vibrate. This vibration is commonly known as *whirling vibration*, *bending vibration* or *lateral shaft vibration*.

Whirling vibrations are in most cases not relevant in propulsion shafting with directly coupled low-speed 2-stroke engines. Typically, whirling vibrations are only relevant in 2-stroke installations having a very long shaft line (longer than 60 m).

Many classification societies do not require whirling vibration calculations for installations with low-speed 2-stroke engines. In general, only the natural whirling frequencies are calculated. The number and position of the shaft bearings have a significant influence on the natural frequencies. As such, the whirling vibration calculation must be performed after or together with the alignment calculation.

For further information on the alignment calculation, please refer to the Alignment Guidelines available on WinGD web page: *Alignment Guidelines for Layout Calculation*.

6.7 Hull vibration

The hull and accommodation area are susceptible to vibration caused by the propeller, machinery and sea conditions. Controlling hull vibration from engine excitation is achieved by a number of different means and can require the fitting of second order mass moment compensators, lateral / longitudinal stays, electrical H-type or X-type compensators and/or torsional vibration dampers.

Avoiding problematic hull vibrations cannot be achieved in isolation and requires consideration and cooperation from the propeller manufacturer, the naval architect, the shipyard and the engine builder.

If requested, WinGD can provide a simplified FE engine model to enable the shipyard or the design institute to predict influence of the engine forces and moments on the ship hull.

6.8 Countermeasures for dynamic effects

6.8.1 External mass moments and vibrations

The following tables indicate where special attention is needed to dynamic effects and the countermeasures required to reduce them.

Where installations incorporate PTO arrangements (see Figure 4-30, 4-71), further investigation is required and WinGD must be contacted.

Table 6-1 Countermeasures for external mass moments

No. of cyl.	Second order compensator
5–6	Balancing countermeasure is likely to be needed
7–8	Balancing countermeasure is not relevant

Table 6-2 Countermeasures for lateral and longitudinal vibrations

No. of cyl.	Lateral stays	Longitudinal stays
5	A	C / A [a)]
6	B	C
7	C [b)] / B [c)]	C
8	A	C
A = The indicated countermeasure is needed. B = The indicated countermeasure can be needed and provision for the corresponding countermeasure is recommended. C = The indicated countermeasure is usually not needed.		

a) 'A' for installations with the main torsional critical above nominal speed (installations with increased shaft diameters)
b) 'C' for n_{cmcr} ≤97 rpm
c) 'B' for n_{cmcr} >97 rpm

Table 6-3 Countermeasures for torsional and axial vibrations of the shafting

No. of cyl.	Torsional vibration	Axial vibration
5–8	Detailed calculations must be carried out for every installation; countermeasures must be selected accordingly (shaft diameters, critical or BSR, flywheel, tuning wheel, torsional vibration damper).	An integrated axial vibration damper is fitted as standard to reduce the axial vibration in the crankshaft. However, the effect of the coupled axial vibration on the propulsion shafting components must be checked by calculation.

6.8.2 Synchro-Phasing System in twin engines

An available countermeasure for vibration reduction in twin engine vessels is the WinGD Synchro-Phasing System[1)] (SPS). By changing the relative phase difference of the two engines operating with the same speed, it is possible to neutralise vibrations of a selected frequency and the resulting resonance on the ship hull or structure.

Synchro-Phasing[1)] can be an effective way of reducing vibrations without modifications to the ship structure and with limited cost.

Concept

As discussed previously in this section, it is important that vibrations of the engine or propeller are minimised. Some specific vibrations are problematic if they cause resonance in the surrounding vessel structure.

Alteration of phase angles

With twin-engine vessels the resulting vibration amplitude is equal to the sum of both engines. Thus, it is dependent on the phase difference of the engines. The phase difference of any two vibrations is the relative difference (of angle or time) between any matching points of their vibrational cycles.

It is shown in Figure 6-17, 🗎 6-24 that if the vibrations are in phase (0° phase difference) the resultant amplitude can reach double that of a single vibration. However, towards a phase difference of 180° the amplitude is reduced from the vibrations neutralising each other.

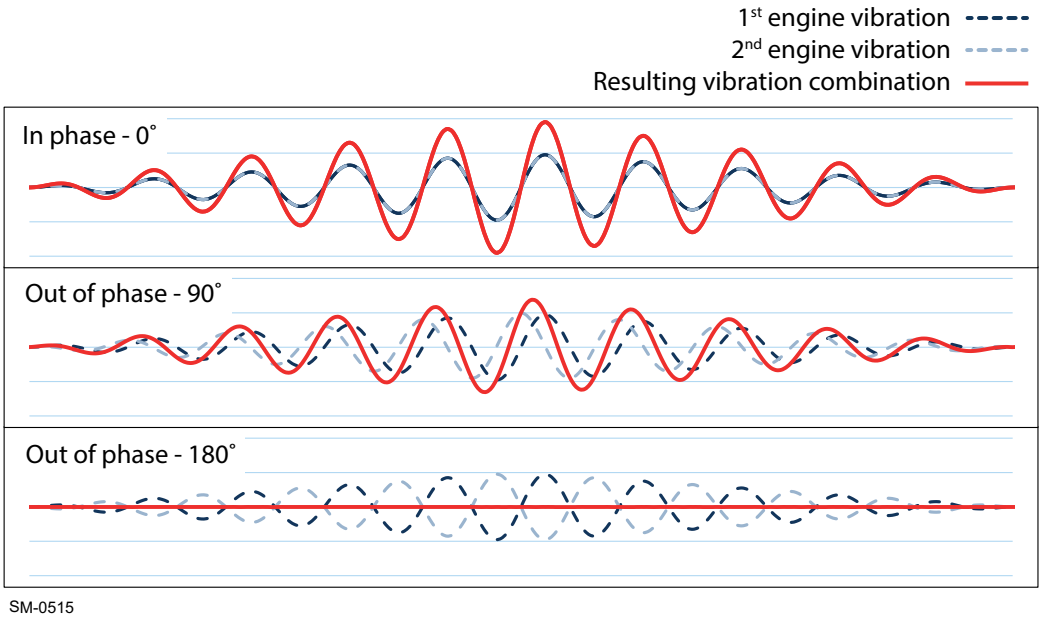

Figure 6-17 Resulting vibration from SPS combinations

By correctly altering the phase angles between two crankshafts, a vibration can be reduced and possibly eliminated, limiting vibrations distribution in the ship hull and superstructure.

1) It is an available option in addition to the chosen engine configuration, and not included in the standard configuration. It needs to be contracted.

SPS[1)] is used to compensate one of the following:

- second order vertical mass moments (M_{2V}) (see section 6.1 External mass forces and moments, 🗎 6-2)
- lateral H-type guide moments (see section 6.2 External lateral forces and moments, 🗎 6-7)
- excitations generated by the blade frequency of the propellers.

NOTE	The compensation is only capable of neutralising one selected frequency at a time.

Components and control

The speed and the crank angle of both engines are measured by control units which are installed on the engines. These signals are continuously transmitted to the Synchro-Phasing[1)] main controller, where the relative position and speed between the two engines is measured.

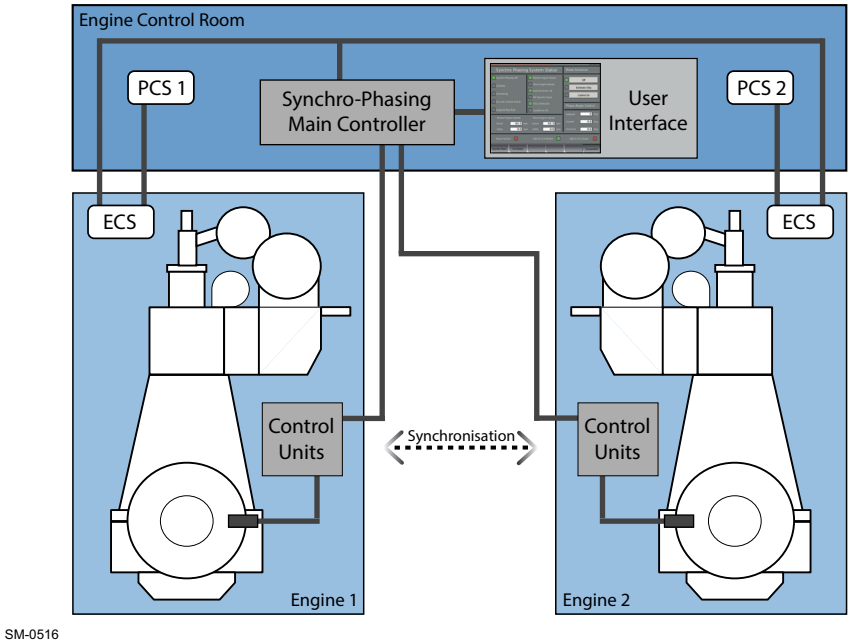

Figure 6-18 Synchro-Phasing System

Main controller and user interface in Engine Control Room

The main controller is installed in the Engine Control Room (ECR) along with the user interface, where the relative phase difference angle (provided by WinGD vibration experts) can be entered. This enables the system to implement a closed loop control of the set-points, which are a function of the difference between the reference phase angle and current phase angle. To adjust the phase angle between the two engines, the speed of only one (slave) engine is adapted.

The following additional components are required:

- control unit (x 2)
- Synchro-Phasing[1)] main controller (x 1)
- user interface (x 1).

NOTE	Any phase angle value entered into the user interface must be previously approved by WinGD Dynamics experts, because incorrect settings can lead to excessive vibrations.

1) It is an available option in addition to the chosen engine configuration, and not included in the standard configuration. It needs to be contracted.

Operating modes and restrictions

There are three operating modes:

- **Control On**
  Fully operational. This can be selected when the release conditions are fulfilled (described further in this section).
- **Estimate Only**
  The speed of each engine and the relative phase angle between them is indicated and continuously updated, but not controlled. This can be selected when the release conditions are fulfilled (described further in this section).
- **Off**
  All control parameters of Synchro-Phasing[1)] control are reduced and reset to initial value (zero). This can be selected at any time.

Release conditions

The following conditions must be fulfilled to activate the **Control On** and **Estimate Only** modes:

- Both engines are running in ahead direction in normal operational condition and unrestricted operation conditions (no protective actions of the engine or major failures).
- Both engines are operated within the speed conditions of the SPS[1)].
- Heavy Sea Mode is not active on either engine.
- No major failure of phase angle control system is active.
- Both engines have the same speed set-point and have completed the load up / down programs to reach this speed set-point.

Deactivation of the **Control On** and **Estimate Only** modes occurs if required. Synchro-Phasing[1)] is also overruled and reset, if engine limitations are reached. After deactivation, **Off** is automatically active.

1) It is an available option in addition to the chosen engine configuration, and not included in the standard configuration. It needs to be contracted.

6.9 Order forms for vibration calculation and simulation

WinGD provides additional support services to assist with system dynamics and vibration analysis. All questionnaires and forms can be downloaded from WinGD web page: *Questionnaires for shaft calculations*.

Forms should be filled in and submitted via e-mail to the following e-mail address, along with any further questions: dynamics.ch@wingd.com

WinGD Ltd.
Engine Dynamics
Schützenstrasse 3
8400 Winterthur
Switzerland

7 Engine Emissions

In 1973, an agreement on the International Convention for the Prevention of Pollution from Ships (ICPPS) was reached. It was modified in 1978 and is now known as MARPOL 73/78.

MARPOL 73/78 Annex VI (also known as MARPOL Annex VI) came into effect in 2005 and contains regulations limiting or prohibiting certain types of emissions from ships, including limitations with respect to air pollution. MARPOL Annex VI is continuously amended. The most recently revised and updated version was published as IMO resolution MEPC.328(76) and came into effect in November 2022.

7.1 Exhaust gas emissions

Major exhaust gas emissions include carbon oxides (CO and CO_2), nitrogen oxides (NO and NO_2), sulphur oxides (SO_2 and SO_3) and Particulate Matter (PM). Exhaust gas emissions are a critical topic of interest in the shipping industry.

Methanol combustion results in lower NO_x emissions compared to diesel combustion. It burns efficiently, producing fewer residual products, such as soot, during the combustion process. Additionally, methanol can be produced from different sources. If it is produced from biomasses and renewable energy, a lower carbon intensity is expected compared to diesel fuels.

7.1.1 Regulation and calculation criteria for NO_x emissions

Regulation 13 of MARPOL Annex VI specifies limit for nitrogen oxides (NO_x) emissions for engines installed on ships. This has direct implication on the propulsion engines design.

NO_x Technical Code

The rules and procedures to demonstrate and verify compliance with Regulation 13 of MARPOL Annex VI are provided in the NO_x Technical Code, which is part of Annex VI and is largely based on the latest revision of ISO 8178.

NO_x calculation criteria

Depending on the rated speed of the engine and the date of vessel keel-laying, the weighted average NO_x emission of the engine must not exceed the maximum allowable value, as shown by the respective curves in Figure 7-1, 🗎 7-2.

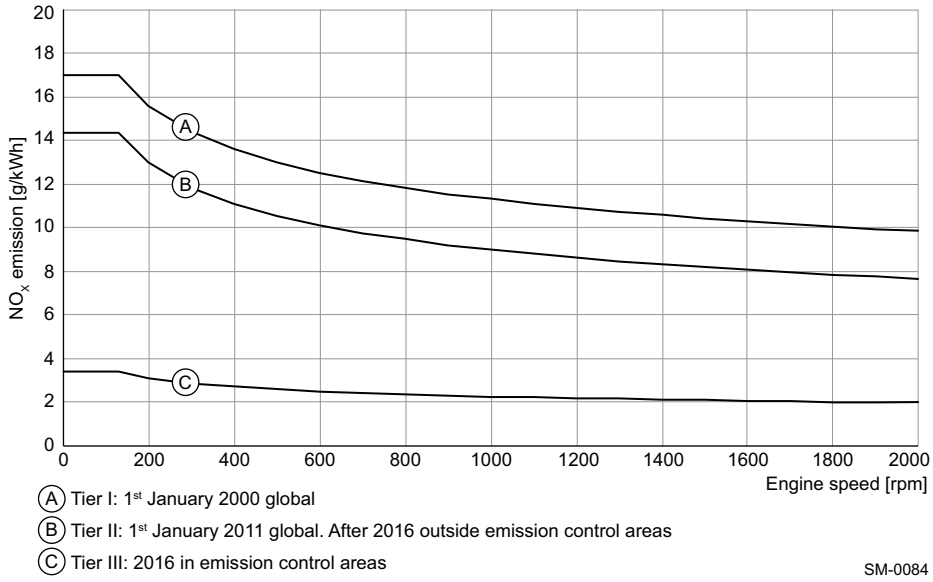

Figure 7-1 Speed dependent maximum allowable average of NO_x emissions

NO_x emissions can be calculated with the following conversion formula:

$$m_{NO_x} = NO_x \cdot \frac{P_{ME}}{1000}$$

Formula 7-1

where:

m_{NOx} ..... = nitrogen oxides emissions [kg/h]

NO_x .....= nitrogen oxides emissions [g/kWh]

P_{ME} ..... = engine power [kW]

The NO_x in Formula 7-1, 🗎 7-2 is a project-specific value and it is a function of the engine type and power. The engine-specific values are available in the *GTD*.

7.1.2 Regulation and calculation criteria for SO_x emissions

Regulation 14 of MARPOL Annex VI specifies the limits for SO_x. Such limits are specifically defined for designated Emission Control Areas (ECA) as well as globally. As shown in Figure 7-2, 🗎 7-3, the ECA limit has been gradually reduced from its initial value of 1.5% to 1.0% (2010) and finally to 0.1% (2015). The global limit has also been gradually reduced from its initial value of 3.5% (2012) to 0.5% (2020).

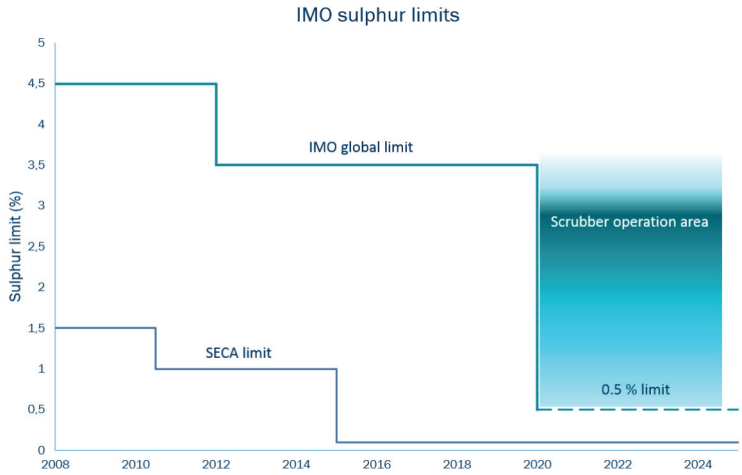

SM-0836

Figure 7-2 Sulphur limits introduced by IMO according to MARPOL Annex VI

SO_x calculation criteria

Total SO_x emissions are linked mainly to two factors. The first factor is the Sulphur Content (SC) of the fuel which must meet the requirements under Regulation 18 of MARPOL Annex VI. The second factor is the fuel consumption.

For engine operation in methanol mode, SO_x emissions (as SO_2) are related to the SC of pilot fuel and can be calculated with the following formula:

$$m_{SO_x} = BSPC \cdot 2.0 \cdot \frac{SC}{100} \cdot \frac{P_{ME}}{1000}$$

Formula 7-2

where:

m_{SOx}..... = oxides of sulphur emissions [kg/h]

$BSPC$.....= Brake Specific Pilot Fuel Consumption [g/kWh]

2.0 .....= molar mass ratio of sulphur to sulphur dioxide

SC..... = Sulphur Content of pilot fuel [%]

P_{ME} ..... = power (main engine) [kW]

For engine operation in diesel mode, SO_x emissions (as SO_2) can be calculated with the following formula:

$$m_{SO_x} = BSFC \cdot 2.0 \cdot \frac{SC}{100} \cdot \frac{P_{ME}}{1000}$$

Formula 7-3

where:

m_{SOx}..... = oxides of sulphur emissions [kg/h]

BSFC.....= Brake Specific Fuel Consumption [g/kWh]

2.0 .....= molar mass ratio of sulphur to sulphur dioxide

SC..... = Sulphur Content [%]

P_{ME} ..... = power (main engine) [kW]

BSFC and BSPC are function of the engine type and power. Project-specific values are available in the *GTD*.

The actual SC of the main fuel as well as the pilot fuel are values stated by the fuel oil supplier on the bunker delivery note.

The value for the molar mass ratio of sulphur to sulphur dioxide is assumed to be equal to 2.0 as the majority of SO_x emissions are SO_2. Assuming that 5% of SO_x emissions are SO_3, this factor changes to 2.03. This illustrates that the equation is a good approximation for the real exhaust gas emissions composition.

7.1.3 Regulation and calculation criteria for CO_2 emissions

The IMO strategy is to reduce CO_2 emissions for shipping by at least 40% by 2030 and a further reduction of up to 70% by 2050 (compared to the 2008 values). New amendments to MARPOL Annex VI came into effect on 1 November 2022. The new measures require all ships to calculate their Energy Efficiency Existing Ship Index (EEXI) and to establish their annual operational Carbon Intensity Indicator (CII) and CII rating.

CO_2 Calculation criteria

CO_2 is considered in EEXI and CII. The CO_2 emissions are related to the type of fuel oil burned by the engine and to the pilot fuel.

For engine operation in methanol mode, the CO_2 can be calculated with the following formula:

$$m_{CO_2} = (BSFC_{CH_3OH} \cdot CF_{CH_3OH} + BSPC \cdot CF_{MDO}) \cdot \frac{P_{ME}}{1000}$$

Formula 7-4

where:

m_{CO2} .....= CO_2 emissions [kg/h]

$BSFC_{CH3OH}$ = Brake Specific Fuel Consumption [g/kWh]

CF_x .....= Conversion Factor

$BSPC$ .....= Brake Specific Pilot Fuel Consumption [g/kWh]

P_{ME} .....= Engine Power [kW]

$BSFC_{CH3OH}$ and BSPC depend on the engine type and rating. Project-specific values are available in the *GTD*.

CF is a non-dimensional conversion factor between fuel consumption and CO_2 emissions. CF has different values depending on the fuel type. The values can be found in resolution *MEPC.308(73)*.

For engine operation in diesel mode, CO_2 can be calculated with the following formula:

$$m_{CO_2} = (BSFC \cdot CF_{MDO}) \cdot \frac{P_{ME}}{1000}$$

Formula 7-5

where:

m_{CO2} .....= CO_2 emissions [kg/h]

$BSFC$ .....= Brake Specific Fuel Consumption [g/kWh]

CF_x .....= Conversion Factor

P_{ME} ..... = Engine Power [kW]

7.1.4 PM emissions

Regulation 14 of MARPOL Annex VI specifies the limits for PM emissions, which are mainly related to unburned combustion residuals and fuel quality. A significant reduction in PM emissions is achieved in methanol mode compared to diesel engines, as methanol burns more efficiently and produces less soot.

7.1.5 Selective catalytic reduction for NO_x emissions control

Selective Catalytic Reduction (SCR) systems are used on board ships to ensure that the exhaust gas emissions comply with the Tier III NO_x regulations stipulated by the IMO.

All X-DF-M engines are IMO Tier II compliant when operating in diesel mode and methanol mode. The SCR system is an exhaust gas treatment system which can be selected to reduce NO_x emissions for compliance with Tier III NO_x regulations in diesel mode and methanol mode.

SCR technology is based on the reduction of nitrogen oxides (NO_x) by means of a reducing agent (typically ammonia, generated from urea) at the surface of a catalyst in a reactor. The reducing agent can be added directly or indirectly into the exhaust gas stream. In the SCR reactor, the NO_x reacts with ammonia and is converted into nitrogen and water vapour, which are major constituents of ambient air.

Urea consumption

If urea is selected as the reducing agent, then it must comply with the ISO 18611-1:2014 standard. According to the specification, urea is an aqueous solution with 40% urea by mass fraction. It has a density in the range of 1.1 kg/l at 20°C. The urea consumption figures are available in the *GTD*. The urea tank sizing must be in accordance with the intended engine operating profile.

The operation of the SCR system requires a continuous and reliable supply of compressed air for air-assisted urea dosing, soot blowing functionality and sealing air (if applicable). An essential parameter for a proper NO_x reduction in the SCR system is the SCR inlet gas temperature. To ensure a proper NO_x reduction, a minimum temperature must be maintained, which depends on the fuel SC, the inlet gas pressure and the catalyst type.

For further information on the SCR system, see the “DG 9726 Exhaust System” available on WinGD web page: *MIDS*.

Three common design variants for the SCR system are Integrated SCR (iSCR), High-Pressure SCR (HP SCR) installed off the engine, and Low-Pressure SCR (LP SCR) installed off the engine. The main difference is the position and volume of the SCR reactor. The iSCR is the most compact design with minimal external piping and the SCR reactor integrated directly on the engine, upstream from the turbocharger. The HP SCR is the only applicable option for high-sulphur fuel in Tier III operation. Alternatively, the LP SCR which is physically bigger, provides more installation flexibility as the SCR reactor can be located anywhere downstream of the turbocharger.

Integrated selective catalytic reduction

For 5- to 7-cylinder engines, the Integrated Selective Catalytic Reduction (iSCR) is available. The iSCR is a built-in engine solution. The exhaust gas flows directly to the iSCR unit before the turbine, therefore located on the high-pressure side. As well as space saving, integrating the SCR reactor before the turbine allows the reactor to be designed in the most compact way due to the higher density of the exhaust gas.

Figure 7-3, 🗎 7-7 includes a sketch of iSCR.

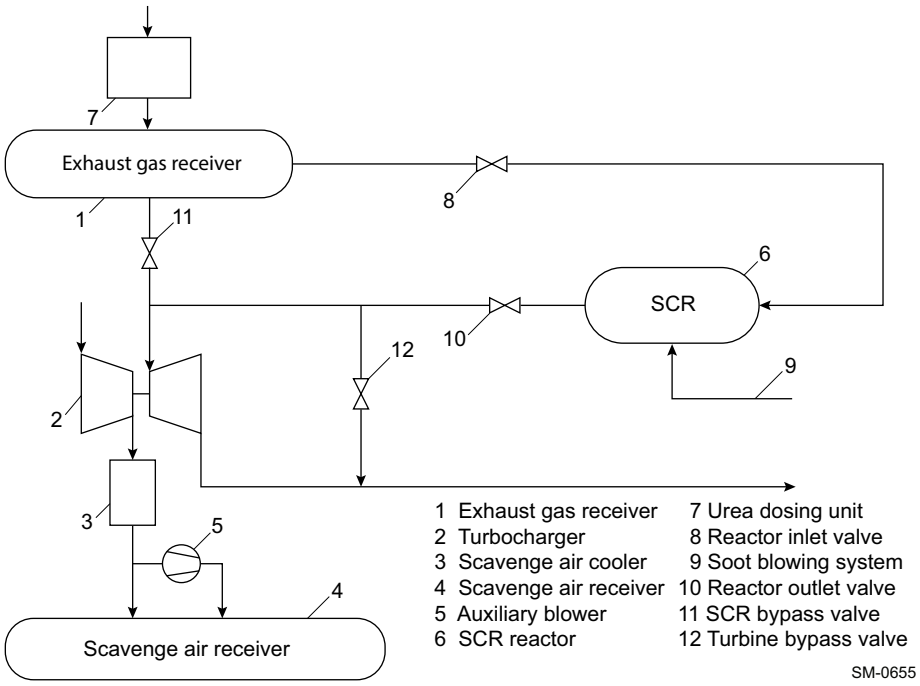

Figure 7-3 Integrated SCR

High-Pressure SCR

The main components of HP SCR are the SCR reactor, the vaporising pipe, the connecting pipes with compensator, two Shut-Off Valves (SOVs) and a bypass valve. The SCR reactor is positioned on the high-pressure side, between the engine exhaust gas manifold and the turbocharger. The SOVs and bypass valve assist with bypassing the SCR system.

The HP SCR requires the following auxiliary systems:

- urea supply system
- compressed air supply system to support urea injection, soot blowing in the SCR reactor and sealing air (if applicable)
- SCR control system.

Figure 7-4, 🗎 7-8 shows a sketch of HP SCR.

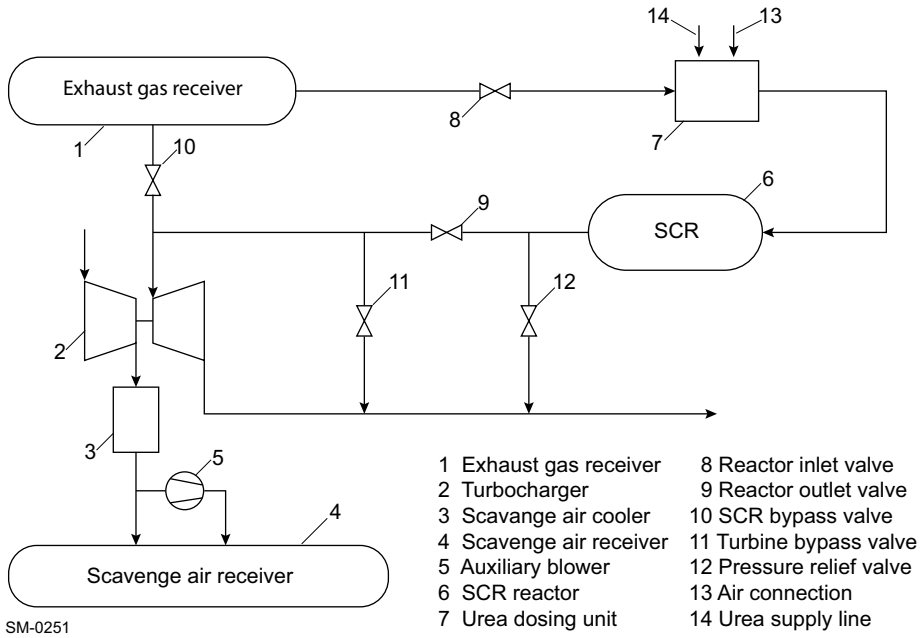

Figure 7-4 High-Pressure SCR

Further information is provided in "DG 9726 HP SCR installation" available on WinGD web page: *SCR Piping Guide*.

Low-Pressure SCR

The main components of LP SCR are the SCR reactor, the urea dosing unit, the decomposition unit and the burner. The SCR reactor is located at the low-pressure side of the turbocharger which provides installation flexibility, because the SCR reactor can be positioned before the economiser.

LP SCR requires the following auxiliary systems:

- urea supply system
- compressed air supply system to support urea injection and soot blowing in the SCR reactor
- SCR control system.

A decomposition unit and an additional burner are required to guarantee a proper temperature for urea decomposition. For this system, a temperature-controlled and a bypass rate-controlled variant are available.

Temperature-controlled variant of urea injection

In the temperature-controlled variant, the required minimum temperature at the SCR reactor inlet is achieved by means of the burner. This temperature is adjusted based on the exhaust gas temperature detected at the SCR reactor inlet and is also influenced by the exhaust gas ratio via the turbine bypass valve.

Bypass rate-controlled variant of urea injection

In the bypass-rate controlled variant, the temperature at the SCR reactor inlet is primarily controlled by the exhaust gas bypass rate. Additionally, the burner is used to heat up the exhaust gas to meet the required minimum temperature level at the SCR inlet.

Figure 7-5, 🗎 7-9 and Figure 7-6, 🗎 7-10 show sketches of LP SCR with the urea injection system.

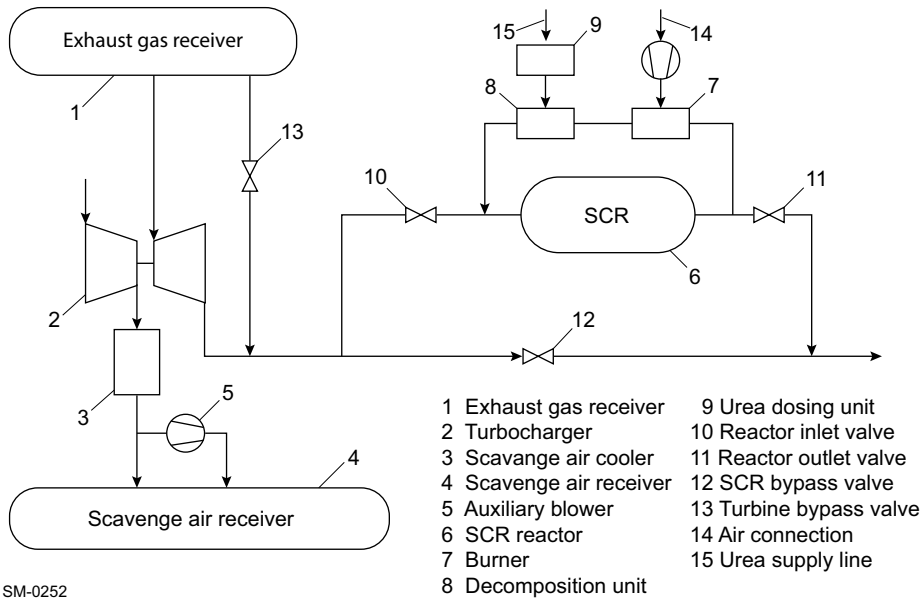

Figure 7-5 Low-Pressure SCR with urea injection (temperature controlled)

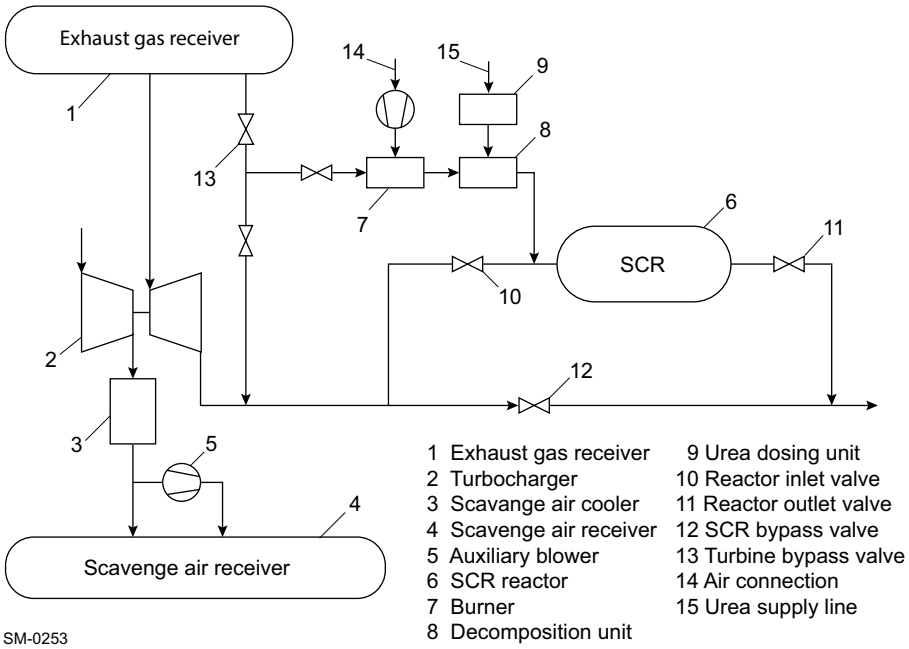

Figure 7-6 Low-Pressure SCR with urea injection (bypass rate controlled)

Performance data for engines operating with SCR technology is available in the *GTD*.

NOTE	The detailed SCR layouts provided above are only indicative and can vary depending on the supplier. For further details, please refer to the SCR supplier. The shipyard and SCR supplier are responsible for the final SCR system.

7.1.6 Scrubber for SO_x emissions control

The international requirements for SO_x and PM emissions are determined by the MARPOL convention Annex VI (see section 7.1.2 Regulation and calculation criteria for SOx emissions, 🗎 7-3). SOx emissions can be controlled by using low-sulphur fuels. However, emissions abatement technologies, such as scrubbers, are also available. Scrubbers can be applied to reduce total SO_x emissions from ships in diesel mode while operating on high-sulphur fuel oil, including auxiliary and main propulsion engines.

SOx scrubbers

In the marine industry, wet scrubbers are typically used for removal of SO_x from the exhaust gas stream. Depending on the scrubbing agent used, the system can be defined as an open-loop or a closed-loop scrubber system. In open-loop systems, the scrubbing agent is seawater. In closed-loop systems, generally the scrubbing agent is freshwater. A hybrid system, using both open- and closed-loop systems, can be considered when high flexibility is required.

The working principle of wet scrubbers involves spraying water into the exhaust gas stream or directing the exhaust gases through a water bath. Following a chemical reaction, the SO_x dissolves in the scrubbing water and is removed from the exhaust gas. The scrubbing water is then cleaned of contaminants before being discharged.

The main components of the SO_x wet scrubber system are the exhaust gas cleaning unit (the scrubber), the wash water treatment unit and the sludge handling unit (see Figure 7-7, 🗎 7-11).

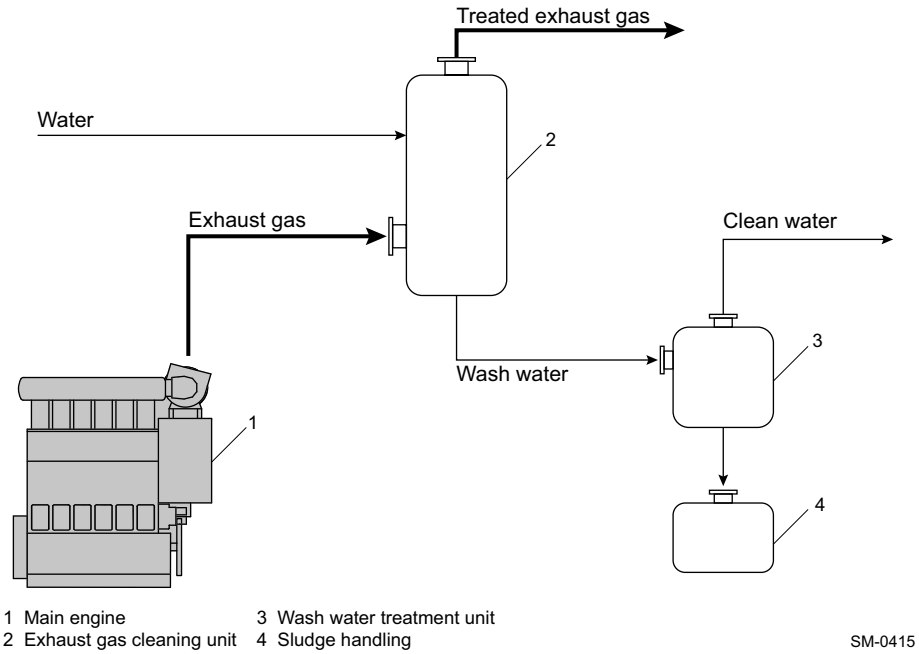

Figure 7-7 Major components of the SO_x wet scrubber system

Open-loop scrubber system

An open-loop system is used when seawater is selected as the scrubbing agent. In this system, seawater is pumped from a sea chest through the scrubber and cleaned by a hydrocyclone before being discharged back into the sea. The water discharged during scrubber operation must be compliant with the limits established by IMO resolution MEPC.340(77).

Figure 7-8, 🗎 7-12 shows a typical configuration of the open-loop scrubber system.

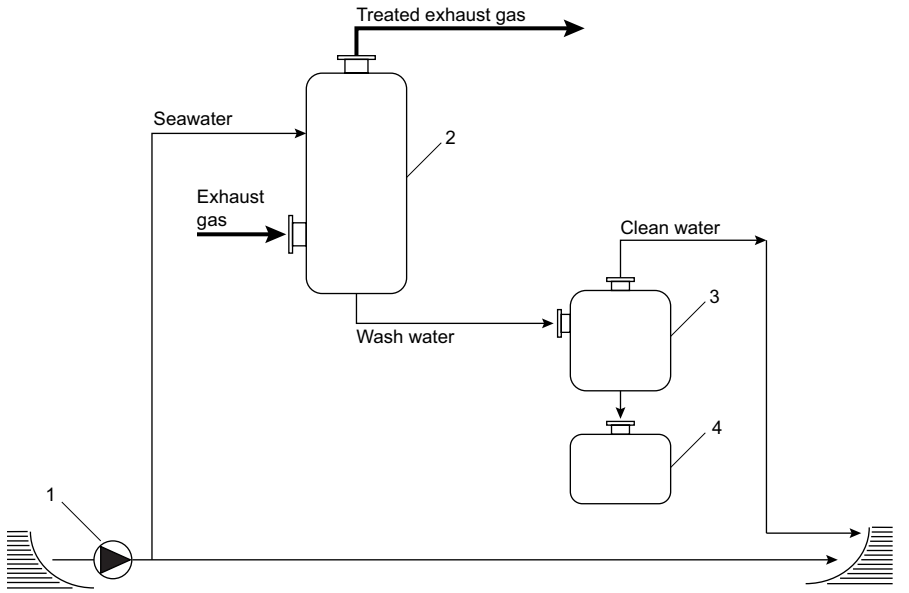

1 Seawater pump
2 Exhaust gas cleaning unit
3 Hydrocyclone
4 Sludge handling

SM-0416

Figure 7-8 Open-loop scrubber system

Closed-loop scrubber system

A closed-loop system generally uses freshwater as the scrubbing agent. A chemical (usually sodium hydroxide) is added to the freshwater to obtain the required alkalinity for neutralising the SO_x. The freshwater circulates in a closed-loop system. A small amount of the water is directed to the wash water treatment unit for cleaning and discharging.

Figure 7-9, 🗎 7-13 shows a typical configuration of the closed-loop scrubber system.

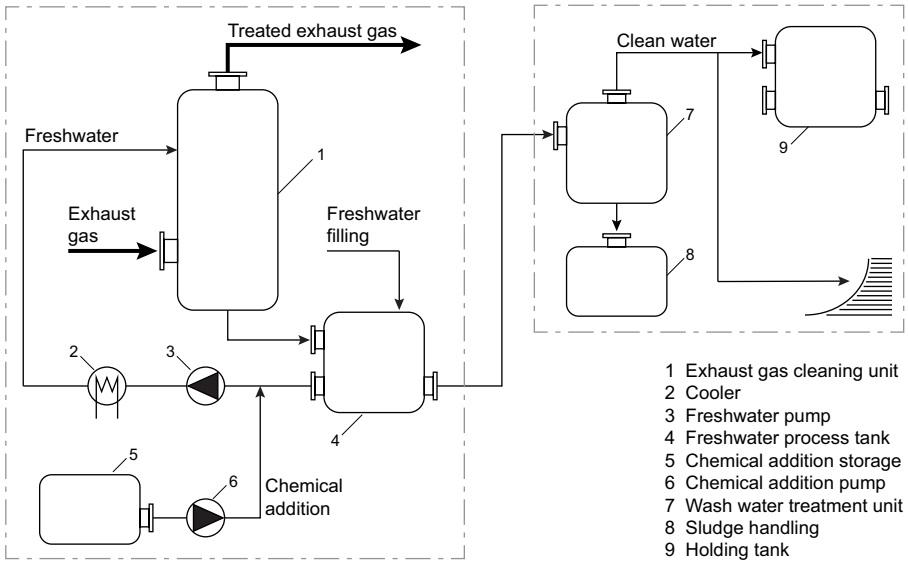

SM-0417

Figure 7-9 Closed-loop scrubber system

Hybrid scrubber system

A hybrid system has the flexibility to operate either in open- or closed-loop mode. As a result, the system can operate with either seawater or freshwater. Generally, the hybrid system uses a common scrubber unit with separate open- and closed-loop systems for the scrubbing agent. For vessels operating in both high- and low-alkalinity areas, this system offers more flexibility.

Figure 7-10, 🗎 7-14 shows a typical configuration of the hybrid scrubber system.

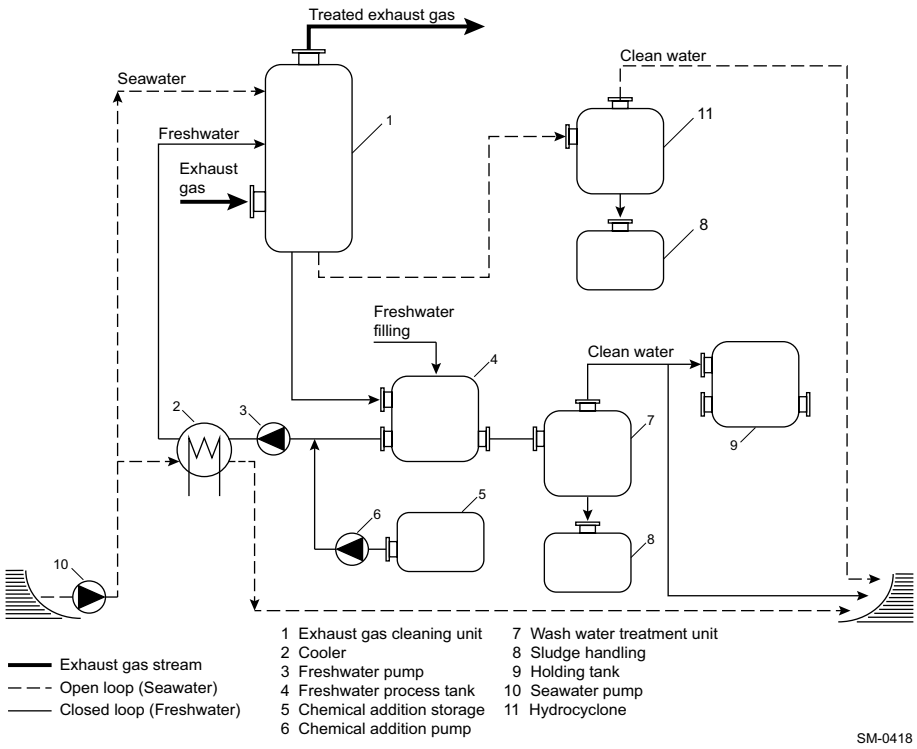

Figure 7-10 Hybrid scrubber system

NOTE	The detailed scrubber system layouts provided above are only indicative and can vary depending on the supplier. For further details, please refer to the scrubber supplier. The shipyard and scrubber supplier are responsible for the final scrubber system.

Performance data for engines operating with scrubber technology is available in the *GTD*.

Alternatively, a dry scrubber system can also be used. Dry scrubbers use a surface-active material to capture the SO_x from the exhaust gas stream. The advantage of dry scrubber technology is that pollutants are not transferred from air to water. A disadvantage is that the residual waste powder, produced during the scrubbing process, requires a specific procedure for disposal. The effectiveness of a dry scrubber depends on the characteristics of the adsorbent material and on the specific surface area. Currently, there is limited availability of this technology in the marine industry.

7.2 Engine noise

As the ship crew / passengers must be protected from the effects of machinery space noise, the maximum acceptable noise levels are defined by rules. For new building projects, the latest IMO Resolution MSC.337 'Code of Noise Levels Onboard Ships' is applied.

The main change introduced by the new IMO MSC.337, compared to the previous Resolution A468(XII), is that in large rooms with many measurement positions, individual positions must be compared to the maximum admissible limit.

NOTE	The noise level graphs in Figure 7-11, 🗎 7-16, Figure 7-13, 🗎 7-17 and Figure 7-14, 🗎 7-18 show typical values for MCR. As the rating dependency is marginal, the values can be used for all ratings.

7.2.1 Air-borne noise

Figure 7-11, 🗎 7-16 shows the average surface sound pressure level. The data in the graph is related to:

- distance of 1 m from the engine
- average values Lp in dB, in comparison with ISO NR-Curves
- overall average values LpA in dB(A) and expected maximal overall single point values
- free field conditions.

Near the turbocharger (air intake) the maximum measured noise level is normally 3–5 dB(A) higher than the average noise level of the engine.

Standard and additional noise reduction

The present document includes the expected maximum overall value for a single point. Figure 7-11, 🗎 7-16 distinguishes between standard noise reduction and additional noise reduction on turbocharger air side. The turbocharger suppliers are currently developing different silencer solutions to comply with the new noise limit regulation of 110 dB(A) for single point.

NOTE	The single point noise limit of 110 dB(A) for machinery spaces can be exceeded if standard silencers are applied.

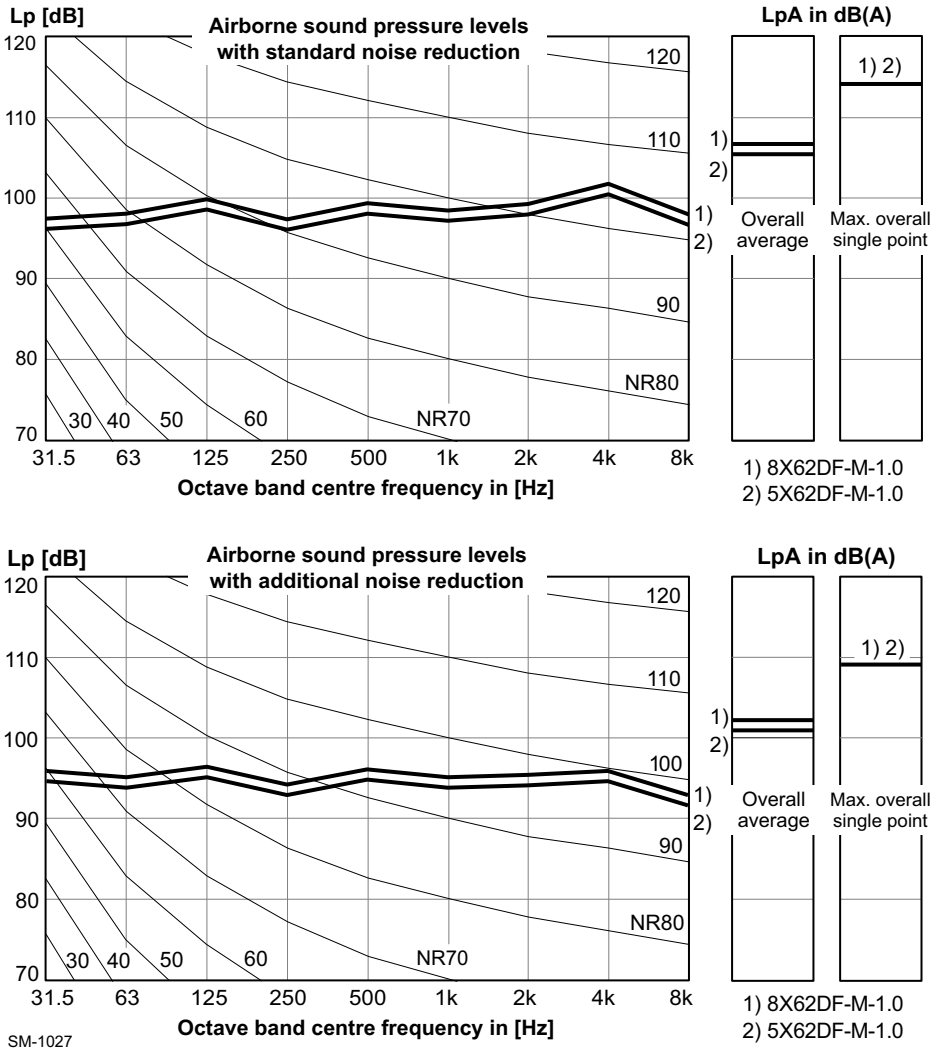

Figure 7-11 Sound pressure level at 1 m distance from the engine

7.2.2 Exhaust noise

In the engine exhaust gas system, the sound pressure level at funnel top (see Figure 7-13, 🗎 7-17) is related to:

- distance of 1 m from edge of exhaust gas pipe opening (uptake)
- angle of 30° to gas flow direction (see Figure 7-12, 🗎 7-17)
- average values Lp in dB, in comparison with ISO NR-Curves
- overall average values LpA in dB(A)
- without economiser, silencer, exhaust gas bypass.

Each doubling of distances from the duct centre reduces noise level by about 6 dB.

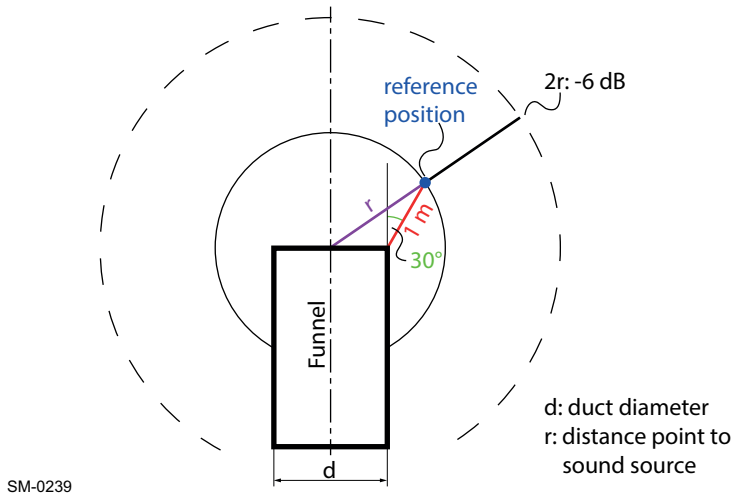

Figure 7-12 Exhaust noise reference point

Silencer after economiser

Depending on the actual noise level allowed on the bridge wing, which is normally between 60 dB(A) and 70 dB(A), a simple flow silencer of absorption type can be placed after the economiser, if noise reduction of the economiser is not sufficient.

Silencer in exhaust line

A silencer in the main engine exhaust line can be considered because on the X-DF engines an exhaust gas bypass is installed by default.

Dimensioning

The silencers must be dimensioned for gas velocity of approximately 35 m/s with pressure loss of approximately 2 mbar at specified CMCR.

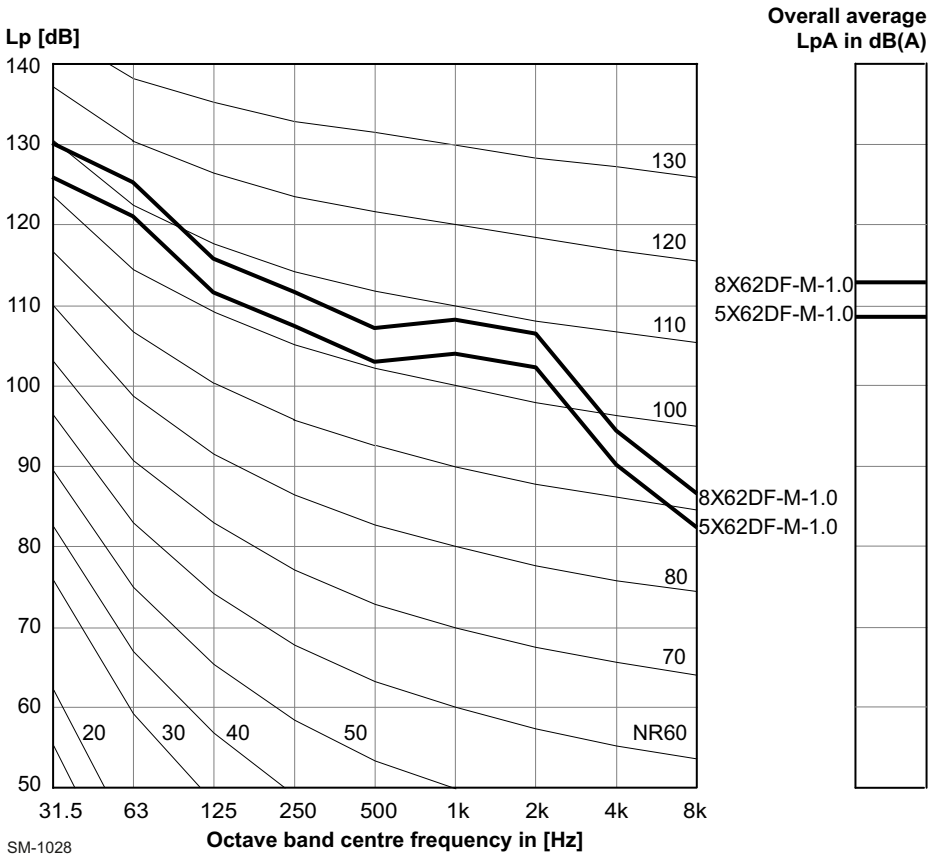

Figure 7-13 Sound pressure level at funnel top

7.2.3 Structure-borne noise

The vibrational energy is propagated via the engine structure, bedplate flanges and engine foundation to the ship structure which starts to vibrate and, thus, emits noise.

The sound pressure levels in accommodations can be estimated with standard empirical formulas and vibration velocity levels.

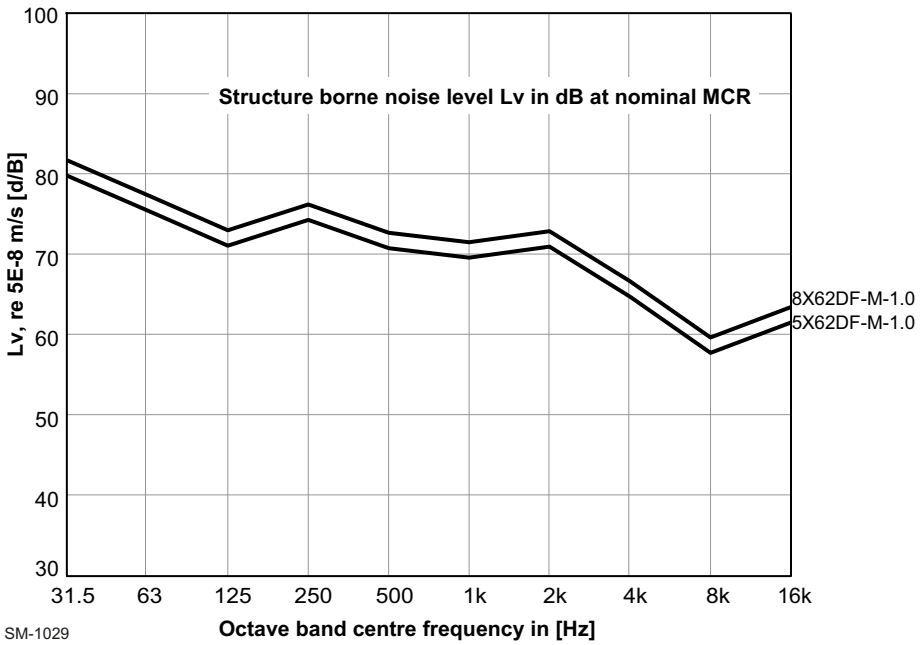

Figure 7-14 Structure-borne noise level at engine feet vertical

8 Engine Dispatch

This chapter describes the necessary measures for transporting the engine from the engine builder to the shipyard or final destination.

Engines are transported complete or as part assemblies, depending on the contract terms.

8.1 Transportation of engines as part assemblies

- Engines transported as part assemblies must be systematically disassembled and cleaned using dry cloths. Each item must be clearly identified with 'paint ball' pen, similar indelible marker, or figure and letter stamps.
- Bearings and running gear must be clearly marked cylinder by cylinder to ensure correct reassembly and to eliminate the risk of parts from one cylinder unit being fitted to another one by mistake.

8.2 Protection of disassembled engines

All parts must be protected against damage by careful crating and against corrosion by applying rust preventing oils or paper.

For further details, please refer to the latest version of "DG 0345 Guideline for Engine Protection – Guideline" available on WinGD web page: *Guideline for engine protection*.

8.3 Removal of rust preventing oils after transportation

8.3.1 Internal parts

The rust preventing oils applied to the internal parts of an assembled engine have properties similar to Lubricating Oils (LOs). Because they do not contain thickening agents of wax type, the rust preventing oils wash off easily and mix without causing harm to the engine or its systems.

8.3.2 External parts

The wax-type rust preventing oils applied to exposed surfaces of the engine components contain thickening agents of wax. When applied, they form an anti-corrosion coating. This coating must be washed off with gas oil, kerosene or white spirit.

9 Appendix

The Appendix gives an overview of the relevant classification societies and lists abbreviations mentioned throughout this document in alphabetical order. Tables of SI dimensions and conversion factors can also be found here.

9.1 Classification societies

Table 9-1 List of classification societies

IACS	International Association of Classification Societies		
ABS	American Bureau of Shipping	KR	Korean Register
BV	Bureau Veritas	LR	Lloyd's Register
CCS	Chinese Classification Society	NK	Nippon Kaiji Kyokai
CRS	Croatian Register of Shipping	PRS	Polski Rejestr Statkow
DNV	Det Norske Veritas	RINA	Registro Italiano Navale
IRS	Indian Register of Shipping	RS	Russian Maritime Register of Shipping

9.2 List of abbreviations

Table 9-2 List of abbreviations

AMS	Alarm and Monitoring System	EM	Engine Margin
BN	Base Number	EMA	Engine Management and Automation
BOG	Boil-Off Gas	FBOG	Forced Boil-Off Gas
BOR	Boil-Off Rate	FGSS	Fuel Gas Supply System
BPV	Back Pressure Valve	FPP	Fixed Pitch Propeller
BSEC	Brake Specific Energy Consumption	FRV	Flow Regulating Valve
BSEF	Brake Specific Exhaust gas Flow	FSM	Fuel Sharing Mode
BSFC	Brake Specific Fuel Consumption	FW	Freshwater
BSGC	Brake Specific Gas Consumption	GAV	Gas Admission Valve
BSPC	Brake Specific Pilot fuel Consumption	GCU	Gas Combustion Unit
BSR	Barred Speed Range	GTD	General Technical Data (application)
CCW	Cylinder Cooling Water	GVU	Gas Valve Unit
CCWC	Cylinder Cooling Water Cooler	HFO	Heavy Fuel Oil
CEN	European Committee for Standardization	HP	High Pressure
CFR	Certified Flow Rate	HT	High Temperature
CMCR	Contracted Maximum Continuous Rating (Rx)	IACS	International Association of Classification Societies
CPP	Controllable Pitch Propeller	iCAT	Integrated Cylinder lubricant Auto Transfer
CSM	Combustion Stability Mode	ICC	Intelligent Combustion Control
CSR	Continuous Service Rating	iCER	Intelligent Control by Exhaust Recycling
DBT	Delta Bypass Tuning	iELBA	Integrated ELectrical BAlancer
DCC	Dynamic Combustion Control	IGC (Code)	International Code of the Construction and Equipment of Ships Carrying Liquefied Gases in Bulk (International Gas Carrier (Code))
DENIS	Diesel Engine coNtrol and optImising Specification	IGF (Code)	International Code of Safety for Ships using Gases or other Low-Flashpoint Fuels
DF	Dual-Fuel	iGPR	Integrated Gas Pressure Regulation (unit)
DG	Design Group	IMO	International Maritime Organization
DMB, DFB/ DMA, DFA, DMZ, DFZ	Diesel oil quality grades as per ISO 8217	iSCR	Integrated Selective Catalytic Reduction
ECA	Emission Control Area	ISO	International Organization for Standardization
ECR	Engine Control Room	LAH	Level Alarm, High
ECS	Engine Control System	LAL	Level Alarm, Low
EGC	Exhaust Gas Cooler	LCV	Lower Calorific Value

LFO	Light Fuel Oil	PI	Proportional plus Integral
LHV	Lower Heating Value	PRU	Power Related Unbalance
LNG	Liquefied Natural Gas	PSV	Purging and Sealing Valve
LO	Lubricating Oil	PTH	Power Take-Home
LOC	Lubricating Oil Cooler	PTI	Power Take-In
LowTV	Low Torsional Vibration	PTO	Power Take-Off
LP	Low Pressure	RCS	Remote Control System
LR	Light Running margin	SAC	Scavenge Air Cooler
LSH	Level Switch, High	SAE	Society of Automotive Engineers
LSL	Level Switch, Low	SCR	Selective Catalytic Reduction
LLT	Low-load Tuning	SM	Sea Margin
LT	Low Temperature	SOLAS	International Convention for the Safety of Life at Sea
MARPOL	International Convention for the Prevention of Pollution from Ships	SOV	Shut-Off Valve
MCR	Maximum Continuous Rating (R1)	SPC	Steam Production Control
MDO	Marine Diesel Oil (DMB, DFB)	SPS	Synchro-Phasing System
ME	Main Engine	SW	Seawater
MEP	Mean Effective Pressure	TBO	Time between Overhauls
MEPC	Marine Environment Protection Committee	TC	Turbocharger
MFD	Misfiring Detection (device)	tEaT	Temperature Exhaust gas after Turbocharger
MGO	Marine Gas Oil (DMA, DFA, DMZ, DFZ)	tEbE	Temperature Exhaust gas before Economiser
MIDS	Marine Installation Drawing Set	TVC	Torsional Vibration Calculation
MIM	Marine Installation Manual	WECS	WinGD Engine Control System
MN	Methane Number	WHR	Waste Heat Recovery
NBOG	Natural Boil-Off Gas	WiCE	WinGD Integrated Control Electronics
NO_x	Nitrogen Oxides	WiDE	WinGD Integrated Digital Expert
NR (Curve)	ISO Noise Rating (Curve)	WMC	Water Mist Catcher
PCS	Propulsion Control System	X-EL	WinGD Electrification Solutions

9.3 SI dimensions for internal combustion engines

Table 9-3 SI dimensions

Symbol	Definition	SI-Units	Other units
a	Acceleration	m/s^2	
A	Area	m^2, cm^2, mm^2	
BSFC	Brake specific fuel consumption	kg/J, kg/(kWh), g/(kWh)	
c	Specific heat capacity	J/(kgK)	
C, S	Heat capacity, entropy	J/K	
e	Net calorific value	J/kg, J/m^3	
E	Modulus of elasticity	N/m^2, N/mm^2	
F	Force	N, MN, kN	
f, v	Frequency	Hz, 1/s	
I	Current	A	
I, J	Moment of inertia (radius)	kgm^2	
l, L	Length	m, cm, mm	
I_a, I_p	Second moment of area	m^4	
K	Coefficient of heat transfer	$W/(m^2K)$	
L	Angular momentum	Nsm	
$L_{(A)TOT}$	Total A noise pressure level	dB	
$L_{(LIN)TOT}$	Total LIN noise pressure level	dB	
L_{OKT}	Average spatial noise level over octave band	dB	
m	Mass	t, kg, g	
M, T	Torque moment of force	Nm	
N, n	Rotational frequency	1/min, 1/s	rpm
p	Momentum	Nm	
p	Pressure	N/m^2, bar, mbar, kPa	1 bar = 100 kPa 100 mmWG = 1 kPa
P	Power	W, kW, MW	
q_m	Mass flow rate	kg/s	
q_v	Volume flow rate	m^3/s	
t	Time	s, min, h, d	
T, Θ, t, θ	Temperature	K, °C	
U	Voltage	V	
V	Volume	m^3, dm^3, l, cm^3	
v, c, w, u	Velocity	m/s, km/h	Kn

Symbol	Definition	SI-Units	Other units
W, E, A, Q	Energy, work, quantity of heat	J, kJ, MJ, kWh	
Z, W	Section modulus	m^3	
ΔT, ΔΘ, ...	Temperature interval	K, °C	
α	Angular acceleration	rad/s^2	
α	Linear expansion coefficient	1/K	
α, β, γ, δ, φ	Angle	rad, °	
γ, σ	Surface tension	N/m	
η	Dynamic viscosity	Ns/m^2	
λ	Thermal conductivity	W/(mK)	
ν	Kinematic viscosity	m^2/s	cSt, RW1
ρ	Density	kg/m^3, kg/dm^3, g/cm^3	
σ, τ	Stress	N/m^2, N/mm^2	
ω	Angular velocity	rad/s	

9.4 Approximate conversion factors

Table 9-4 Conversion factors

Length	1 in			=	25.4 mm
	1 ft	=	12 in	=	304.8 mm
	1 yd	=	3 feet	=	914.4 mm
	1 statute mile	=	1760 yds	=	1609.3 m
	1 nautical mile	=	6080 feet	=	1853 m
Mass	1 oz			=	0.0283 kg
	1 lb	=	16 oz	=	0.4536 kg
	1 long ton			=	1016.1 kg
	1 short ton			=	907.2 kg
	1 tonne			=	1000 kg
Volume (fluids)	1 Imp. pint			=	0.568 l
	1 U.S. pint			=	0.473 l
	1 Imp. quart			=	1.136 l
	1 U.S. quart			=	0.946 l
	1 Imp. gal			=	4.546 l
	1 U.S. gal			=	3.785 l
	1 Imp. barrel	=	36 Imp. gal	=	163.66 l
	1 barrel petroleum	=	42 U.S. gal	=	158.98 l
Force	1 lbf (pound force)			=	4.45 N
Pressure	1 psi (lb/sq in)			=	6.899 kPa (0.0689 bar)
Velocity	1 mph			=	1.609 km/h
	1 knot			=	1.853 km/h
Acceleration	1 mphps			=	0.447 m/s^2
Temperature	1 °C			=	0.55 x (°F -32)
Energy	1 BTU			=	1.06 kJ
	1 kcal			=	4.186 kJ
Power	1 kW			=	1.36 bhp
	1 kW			=	860 kcal/h
Volume	1 in^3			=	16.4 cm^3
	1 ft^3			=	0.0283 m^3
	1 yd^3			=	0.7645 m^3

Area	1 in^2	=	6.45 cm^2
	1 ft^2	=	929 cm^2
	1 yd^2	=	0.836 m^2
	1 acre	=	4047 m^2
	1 sq mile (of land) = 640 acres	=	2.59 km^2

WinGD Ltd. in brief

WinGD Ltd. is a leading developer of low-speed gas and diesel engines used for propulsion power in merchant shipping. WinGD sets the industry standard for environmental sustainability, reliability, efficiency and safety. WinGD provides designs, training and technical support to engine manufacturers, shipbuilders and ship operators worldwide. Headquartered in Winterthur, Switzerland, since its inception as the Sulzer Diesel Engine business in 1893, it carries on the legacy of excellence in design.

www.wingd.com